GARD

Unparalleled Protection

Webinar:
An Effective Arc Flash Safety Program

Daleep Mohla

September 10th, 2015: 2pm ET

Agenda

- Arc Flash Defined and Quantified
- NFPA 70E / CSA Z 462 - Recent Updates
- What is the ANSI Z10 Hierarchy of Risk Control ?
- Why Start with Choice of Grounding System?
- Technology Options to Reduce Risk and Hazard
- Comparison Table of Technologies

What is an Arc Flash?

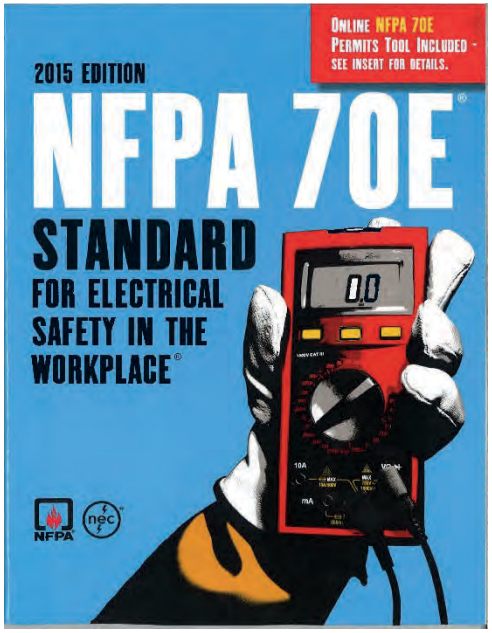

According to NFPA 70E:

A dangerous condition associated with the release of energy caused by an electric arc.

A hazard beyond shock and electrocution.

Arc Flash

What does it do?

It hurts people !

It destroys equipment !

It Results in Penalties from OSHA

It Causes outages !

It Affects morale !

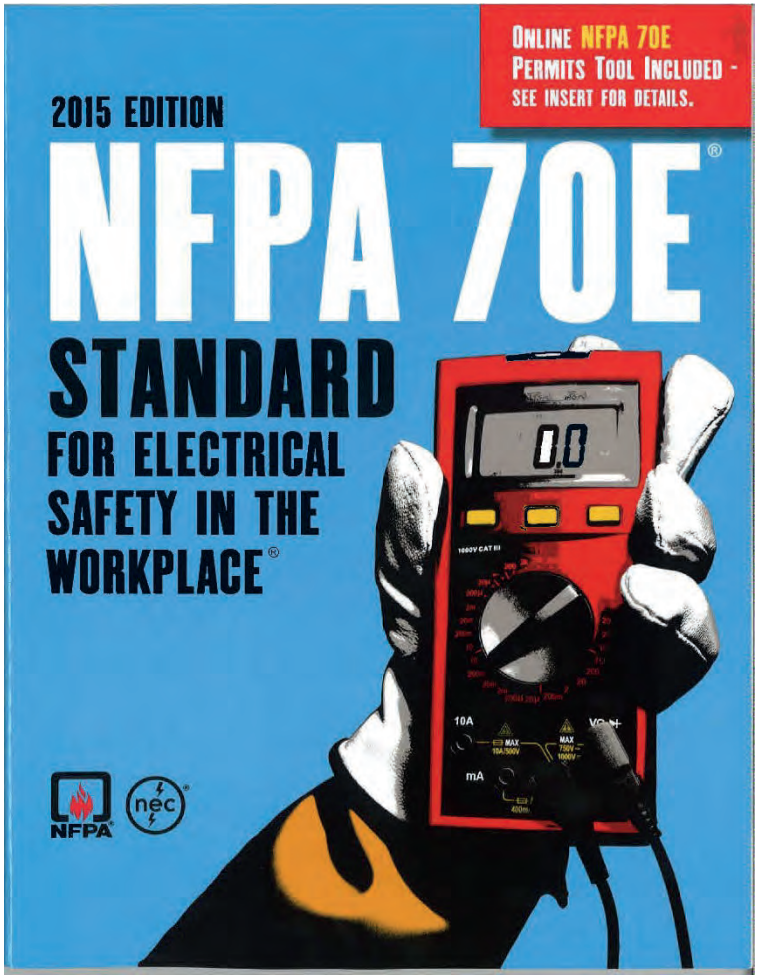

NFPA 70E Annex 0

General Design Requirements 0.2.1

Employers, facility owners, and managers who have responsibility for facilities and installations having electrical energy as a potential hazard to employees and other personnel should ensure that electrical hazards risk assessments are performed during the design of electrical systems and installations”

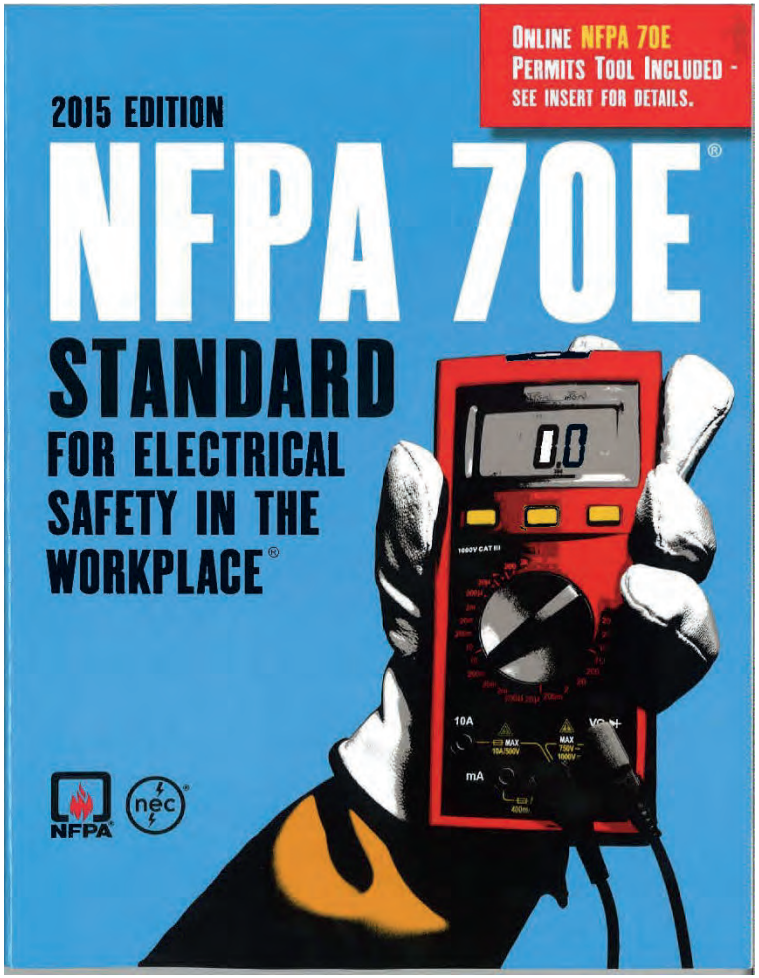

NFPA 70E Annex 0

General Design Requirements 0.2.2

Design option decision should facilitate the ability to eliminate hazards or reduce risk by doing the following:

1. Reducing the likelihood of exposure

2. Reducing the magnitude or severity of exposure

Informative Annex O Safety-Related Design Requirements

This informative annex is not a part of the requirements of this NFPA document but is included for informational purposes only.

O.1 Introduction. This informative annex addresses the responsibilities of the facility owner or manager or the employer having responsibility for facility ownership or operations management to perform a risk assessment during the design of electrical systems and installations.

O.1.1 This informative annex covers employee safety-related design concepts for electrical equipment and installations in workplaces covered by the scope of this standard. This informative annex discusses design considerations that have impact on the application of the safety-related work practices only.

O.1.2 This informative annex does not discuss specific design requirements. The facility owner or manager or the employer should choose design options that eliminate hazards or reduce risk and enhance the effectiveness of safety-related work practices.

O.2 General Design Considerations.

O.2.1 Employers, facility owners, and managers who have responsibility for facilities and installations having electrical energy as a potential hazard to employees and other personnel should ensure that electrical hazards risk assessments are performed during the design of electrical systems and installations.

O.2.2 Design option decisions should facilitate the ability to eliminate hazards or reduce risk by doing the following:

(1) Reducing the likelihood of exposure

(2) Reducing the magnitude or severity of exposure

(3) Enabling achievement of an electrically safe work condition

O.2.3 Incident Energy Reduction Methods. The following methods have proved to be effective in reducing incident energy:

(1) Zone-selective interlocking. A method that allows two or more circuit breakers to communicate with each other so that a short circuit or ground fault will be cleared by the breaker closest to the fault with no intentional delay. Clearing the fault in the shortest time aids in reducing the incident energy.

(2) Differential relaying. The concept of this protection method is that current flowing into protected equipment must equal the current out of the equipment. If these two currents are not equal, a fault must exist within the equipment, and the relaying can be set to operate for a fast interruption. Differential relaying uses current transformers located on the line and load sides of the protected equipment and fast acting relay.

(3) Energy-reducing maintenance switching with a local status indicator. An energy-reducing maintenance switch allows a worker to set a circuit breaker trip unit to operate faster while the worker is working within an arc flash boundary, as defined in NFPA 70E, and then to set the circuit breaker back to a normal setting after the work is complete.

O.2.4 Other Methods.

(1) Energy-reducing active arc flash mitigation system. This system can reduce the arcing duration by creating a low impedance current path, located within a controlled compartment, to cause the arcing fault to transfer to the new current path, while the upstream breaker clears the circuit. The system works without compromising existing selective coordination in the electrical distribution system.

(2) Arc flash relay. An arc flash relay typically uses light sensors to detect the light produced by an arc flash event. Once a certain level of light is detected the relay will issue a trip signal to an upstream overcurrent device.

(3) High-resistance grounding. A great majority of electrical faults are of the phase-to-ground type. High-resistance grounding will insert an impedance in the ground return path and will typically limit the fault current to 10 amperes and below (at 5 kV nominal or below), leaving insufficient fault energy and thereby helping reduce the arc flash hazard level. High-resistance grounding will not affect arc flash energy for line-to-line or line-to-line-to-line arcs.

(4) Current-limiting devices. Current-limiting protective devices reduce incident energy by clearing the fault faster and by reducing the current seen at the arc source. The energy reduction becomes effective for current above the current-limiting threshold of the current-limiting fuse or current limiting circuit breaker.

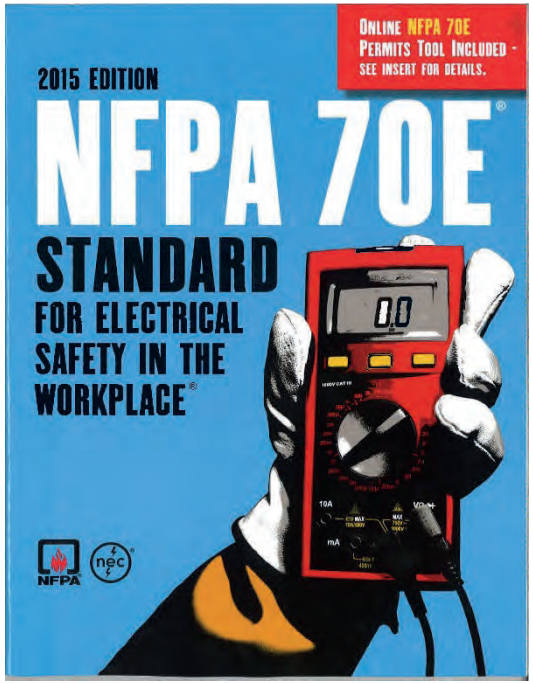

ANSI Z10

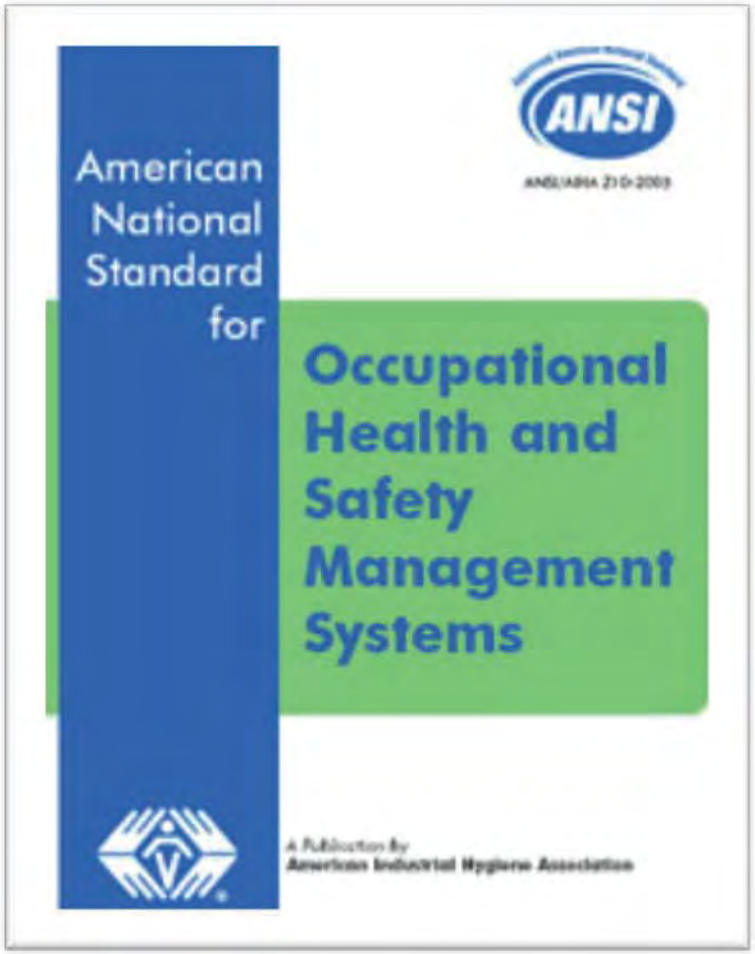

1.1 Scope. This standard defines minimum requirements for occupational health and safety management systems (OHSMS).

1.2 Purpose. The primary purpose of this standard is to provide a management tool to reduce the risk of occupational injuries, illnesses, and fatalities.

1.3 Application. This standard is applicable to organizations of all sizes and types.

ANSI Z10

Hazard Analysis & Risk Assessment Guide

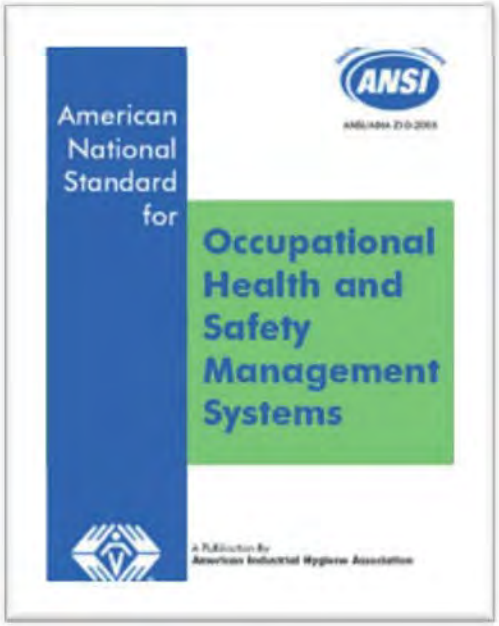

1) Select a manageable task, system or process to be analyzed.

2) Identify the hazards.

3) Define possible failure modes that result in exposure to hazards and the realization of the potential harm.

4) Estimate the frequency and duration of exposure to the hazard.

5) Assess the severity of injury/illness.

6) Determine the likelihood of the occurrence of a hazardous event.

7) Define the level of risk using a risk assessment matrix, The level of risk is determined by plotting the likelihood of an occurrence or exposure and the potential severity of the injury or illness. The organization must then determine if the level of risk is acceptable or unacceptable.

8) Hazard risks can then be listed and ranked.

9) The organization selects prioritized OHSMS issues and develops documented objectives and implementation plans.

ANSI Z10 Hierarchy

Hierarchy of Hazard Control Measures
From ANSI Z10

Control Effectiveness

Elimination
Eliminate the hazard during design

Substitution
Substitution of less hazardous equipment, system or energy

Engineering Controls
Design options that automatically reduces risk

Warnings
Automatic or manual, permanent or temporary, visible or audible warning systems, signs, barriers and labels

Administrative Controls
Planning processes, training, permits, safe work practices, maintenance systems, communications, and work management

Personal Protective Equipment
Available, effective, easy to use

Life Cycle Value

NFPA 70E 110.1(G)

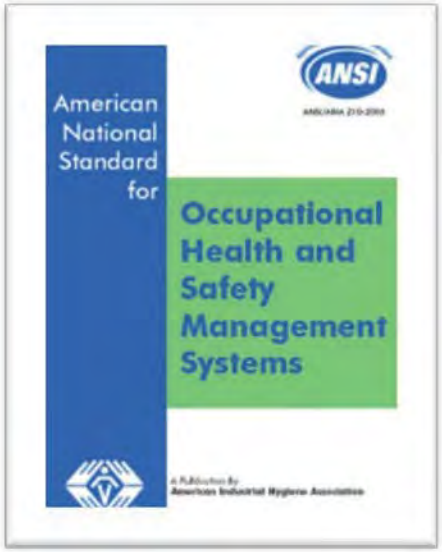

ANSI Z10 Hierarchy Reformatted

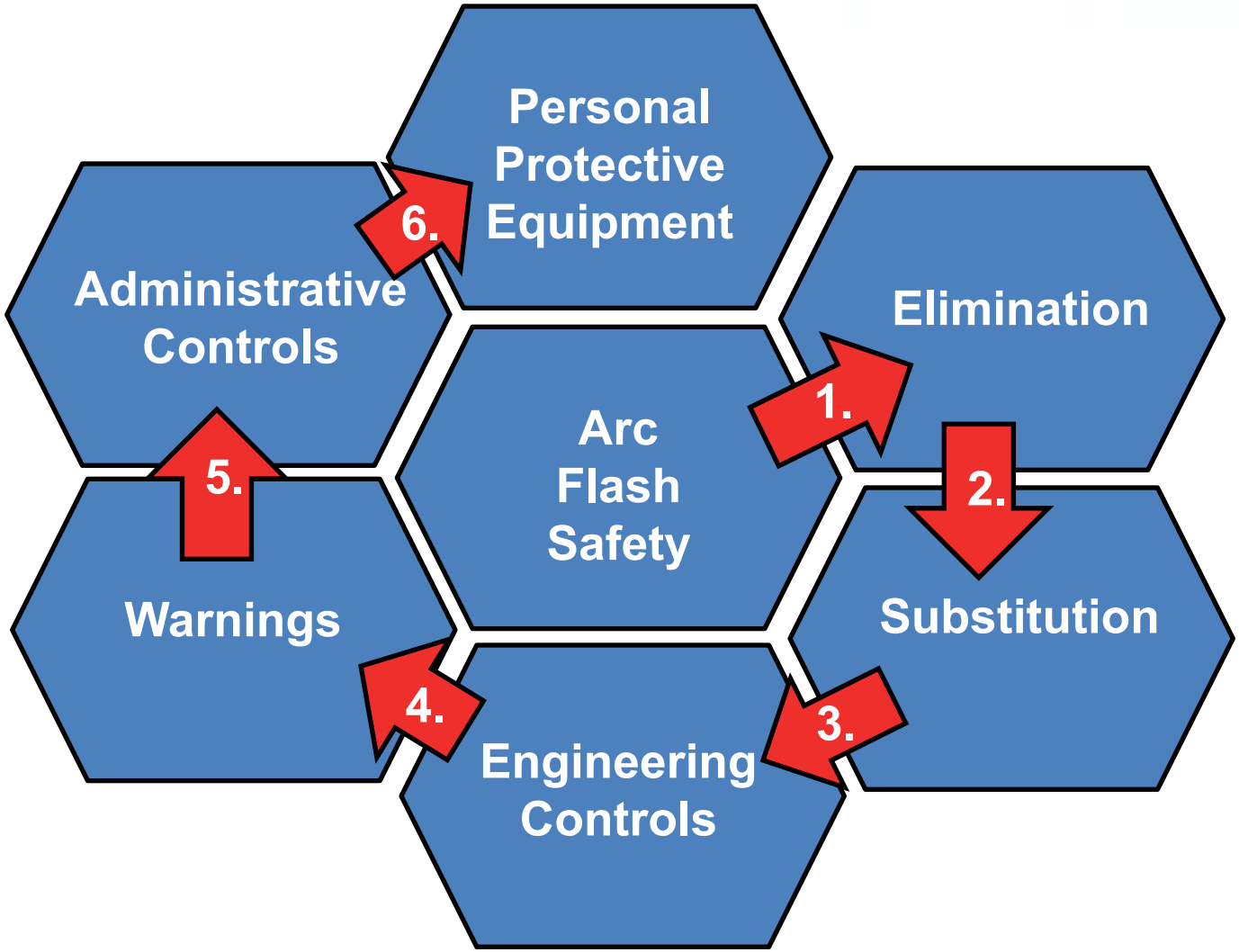

Informative Annex O Safety-Related Design Requirements

This informative annex is not a part of the requirements of this NFPA document but is included for informational purposes only.

O.1 Introduction. This informative annex addresses the responsibilities of the facility owner or manager or the employer having responsibility for facility ownership or operations management to perform a risk assessment during the design of electrical systems and installations.

O.1.1 This informative annex covers employee safety-related design concepts for electrical equipment and installations in workplaces covered by the scope of this standard. This informative annex discusses design considerations that have impact on the application of the safety-related work practices only.

O.1.2 This informative annex does not discuss specific design requirements. The facility owner or manager or the employer should choose design options that eliminate hazards or reduce risk and enhance the effectiveness of safety-related work practices.

O.2 General Design Considerations.

O.2.1 Employers, facility owners, and managers who have responsibility for facilities and installations having electrical energy as a potential hazard to employees and other personnel should ensure that electrical hazards risk assessments are performed during the design of electrical systems and installations.

O.2.2 Design option decisions should facilitate the ability to eliminate hazards or reduce risk by doing the following:

(1) Reducing the likelihood of exposure

(2) Reducing the magnitude or severity of exposure

(3) Enabling achievement of an electrically safe work condition

O.2.3 Incident Energy Reduction Methods. The following methods have proved to be effective in reducing incident energy:

(1) Zone-selective interlocking. A method that allows two or more circuit breakers to communicate with each other so that a short circuit or ground fault will be cleared by the breaker closest to the fault with no intentional delay. Clearing the fault in the shortest time aids in reducing the incident energy.

(2) Differential relaying. The concept of this protection method is that current flowing into protected equipment must equal the current out of the equipment. If these two currents are not equal, a fault must exist within the equipment, and the relaying can be set to operate for a fast interruption. Differential relaying uses current transformers located on the line and load sides of the protected equipment and fast acting relay.

(3) Energy-reducing maintenance switching with a local status indicator. An energy-reducing maintenance switch allows a worker to set a circuit breaker trip unit to operate faster while the worker is working within an arc flash boundary, as defined in NFPA 70E, and then to set the circuit breaker back to a normal setting after the work is complete.

O.2.4 Other Methods.

(1) Energy-reducing active arc flash mitigation system. This system can reduce the arcing duration by creating a low impedance current path, located within a controlled compartment, to cause the arcing fault to transfer to the new current path, while the upstream breaker clears the circuit. The system works without compromising existing selective coordination in the electrical distribution system.

(2) Arc flash relay. An arc flash relay typically uses light sensors to detect the light produced by an arc flash event. Once a certain level of light is detected the relay will issue a trip signal to an upstream overcurrent device.

(3) High-resistance grounding. A great majority of electrical faults are of the phase-to-ground type. High-resistance grounding will insert an impedance in the ground return path and will typically limit the fault current to 10 amperes and below (at 5 kV nominal or below), leaving insufficient fault energy and thereby helping reduce the arc flash hazard level. High-resistance grounding will not affect arc flash energy for line-to-line or line-to-line-to-line arcs.

(4) Current-limiting devices. Current-limiting protective devices reduce incident energy by clearing the fault faster and by reducing the current seen at the arc source. The energy reduction becomes effective for current above the current-limiting threshold of the current-limiting fuse or current limiting circuit breaker.

A great majority of electrical faults are of the phase-to-ground type. High resistance grounding will insert an impedance in the ground return path and will limit the fault current, leaving insufficient fault energy and thereby helping reduce the arc flash hazard.

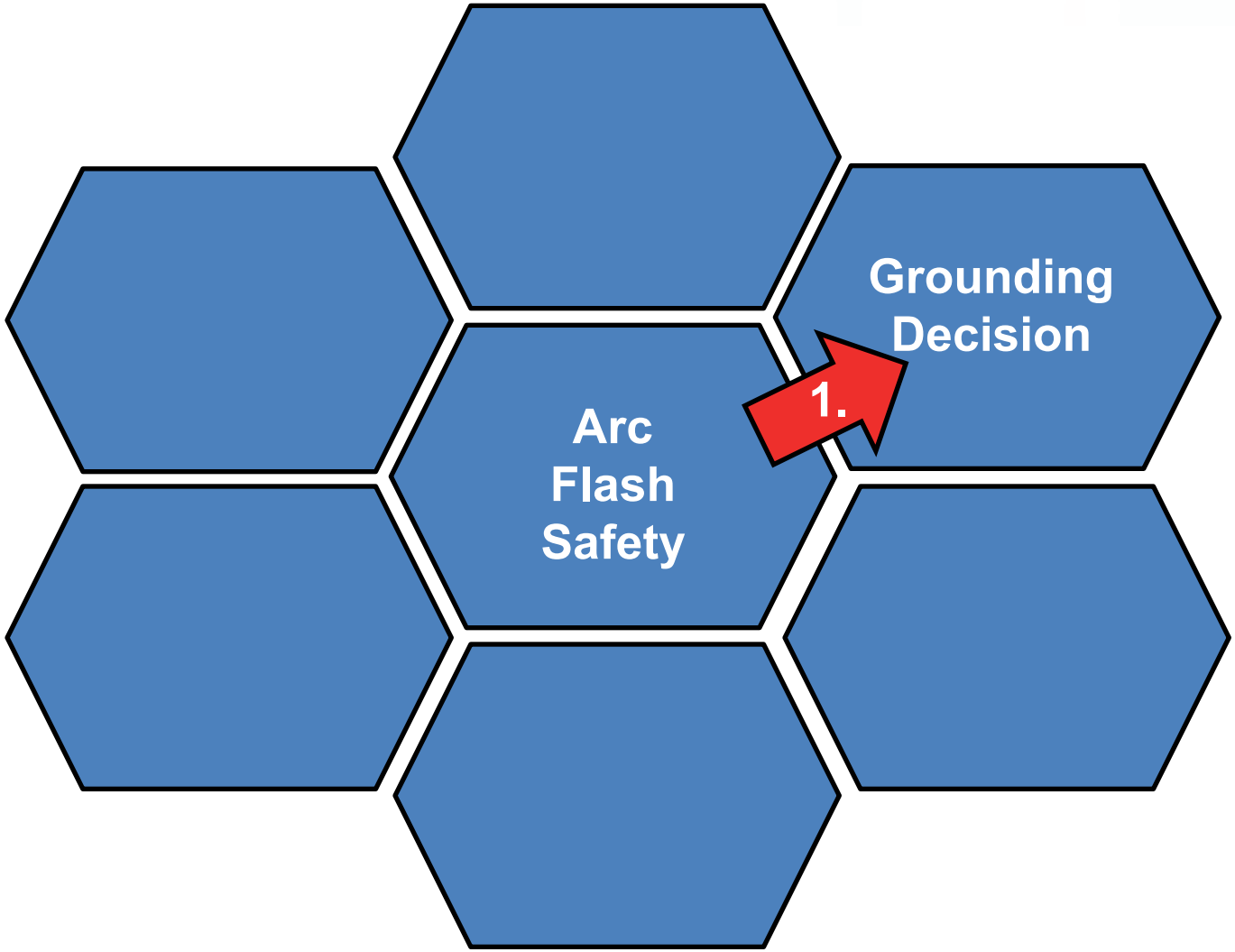
Grounding
Decision
1.
Arc
Flash
Safety

Elimination of Hazard
High Resistance Grounding

How Does HRG reduce Arc Flash?

95% of all electrical faults are phase to ground faults.

By limiting the fault current to a low level, 10 amps or less, there is insufficient current for the arc to re-strike and it self-extinguishes.

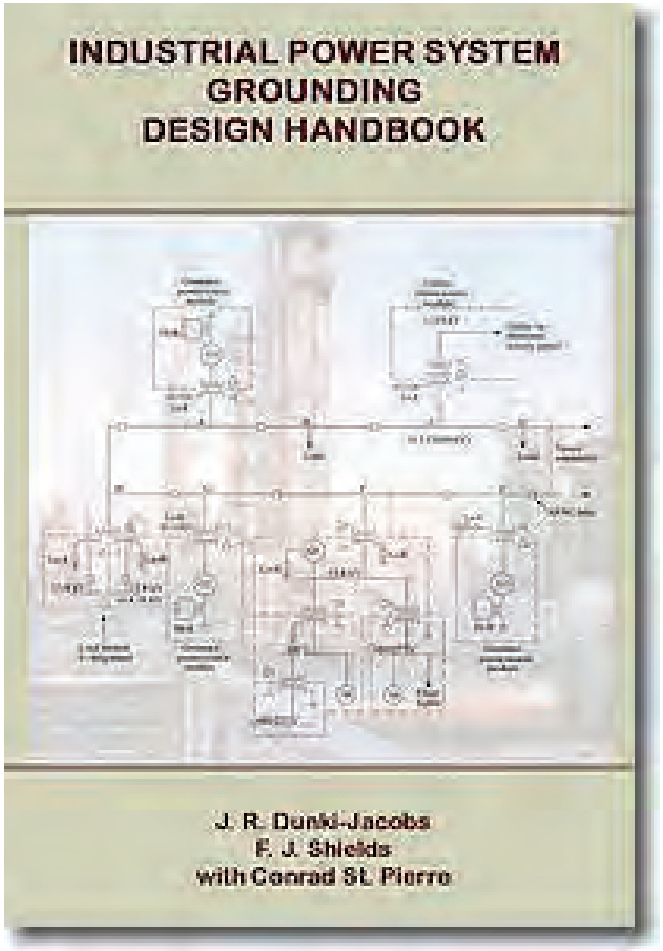

Elimination of Hazard

Ground Faults on Ungrounded Systems

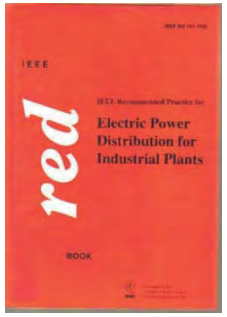

IEEE Std 141-1993 (Red Book)

7.2.2. High-resistance grounding provides the same advantages as ungrounded systems yet limits the steady state and severe transient over-voltages associated with ungrounded systems.

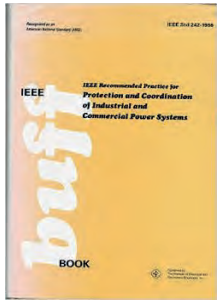

IEEE Std 242-1986 Recommended Practice for the Protection and Coordination of Industrial and Commercial Power Systems

7.2.5. Ungrounded systems offer no advantage over high-resistance grounded systems in terms of continuity of service and have the disadvantages of transient over-voltages, locating the first fault and burn-downs from a second ground fault. For these reasons, they are being used less frequently today than high-resistance grounded systems”

Ungrounded System

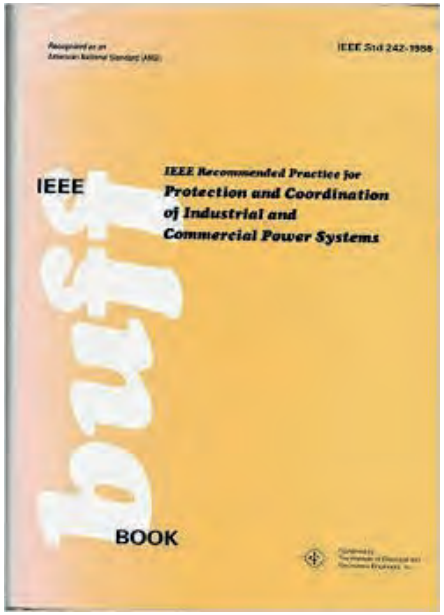

IEEE Standard 242-2001 (Buff Book)
Recommended Practice for Protection and Coordination of Industrial and Commercial Power Systems

8.2.5 **If this ground fault is intermittent or allowed to continue, the system could be subjected to possible severe over-voltages to ground, which can be as high as six to eight times phase voltage.** Such over-voltages can puncture insulation and result in additional ground faults. These over- voltages are caused by repetitive charging of the system capacitance or by resonance between the system capacitance and the inductance of equipment in the system.

Ungrounded Systems

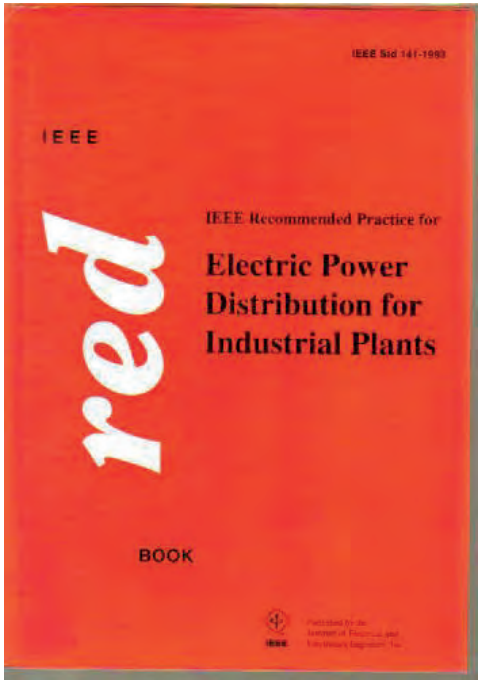

IEEE Std 141-1993 (Red Book)
Recommended Practice for Electric Power Distribution for Industrial Plants

7.2.1 Accumulated operating experience indicates that, in general purpose industrial power distribution systems, **the over-voltage incidents associated with ungrounded operation reduce the useful life of insulation** so that electric current and machine failures occur more frequently than they do on grounded power systems.

Ungrounded Systems

FM Global 5-18 Protection of Electrical Equipment Single Phase and Other Related Faults

- In ungrounded systems a phase to ground fault often produces dangerous overvoltage…
- Sustained arcing faults in low voltage apparatus are often initiated by a single-phase fault to ground which results in extensive damage to switchgear and motor control centers.

FM Global 5-10 Protective Grounding for Electric Power Systems and Equipment

- 2.3.3.1 Unlike the ungrounded system the high resistance grounded system prevents transient overvoltage which can cause potential failure of insulation.
- 2.3.4.1 Convert ungrounded systems to high resistance grounded systems.

Arcing Ground Faults Intermittent or Re-strike

Intermittent ground fault: A re-striking ground fault can create a high frequency oscillator (RLC circuit), independent of L and C values, causing high transient over-voltages.

– i.e. re-striking due to ac voltage waveform or loose wire caused by vibration

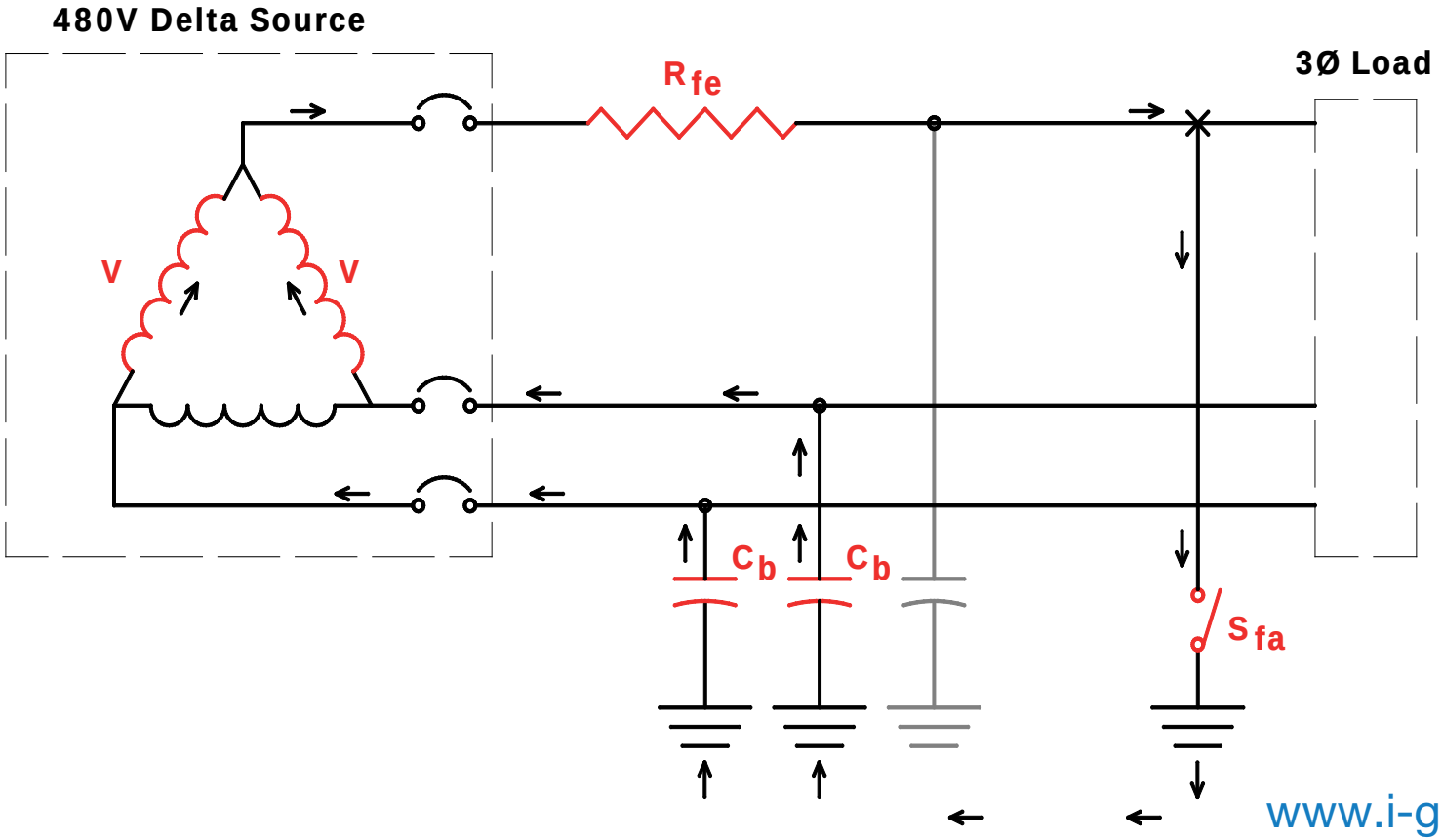

Case Study

Automotive Facility **Troy, Michigan**

- Phase to Ground voltage monitored for 4 weeks ungrounded and 4 weeks high resistance grounded.
- 485 events with peak voltage above 700 volts due to intermittent ground faults.
- Peak voltage 1050 volts
- Transients lead to insulation degradation.

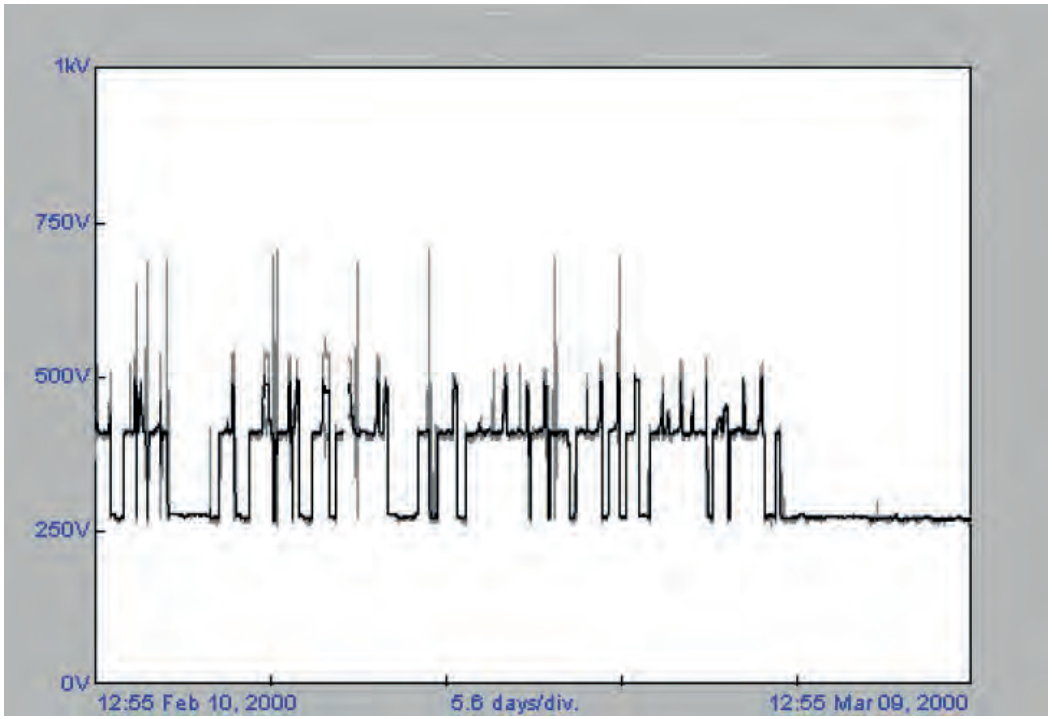

Impact of Transient Over-voltages

Insulation failure resulting in phase to phase fault and equipment damage in excess of $200k.

Case Study

Automotive Facility

Phase voltage ungrounded

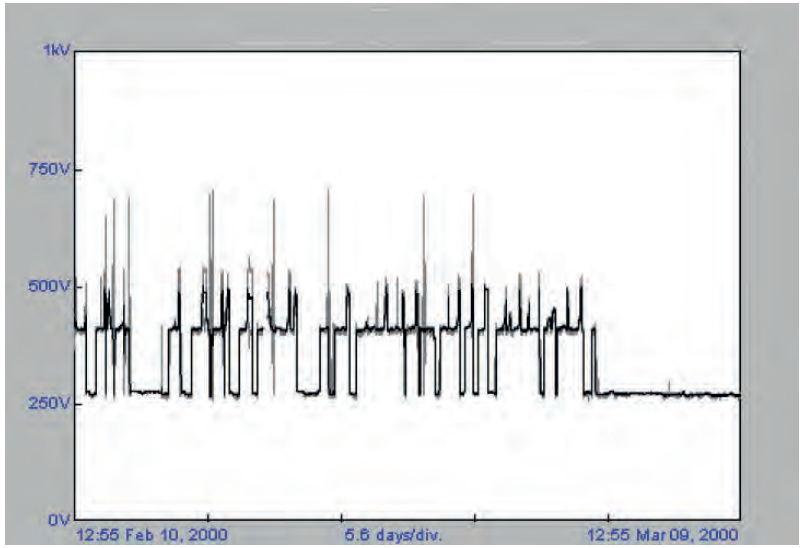

High level of transients
485 peak events over 700 volts
Peak voltage 1050 volts

Troy, Michigan

Phase voltage HRG

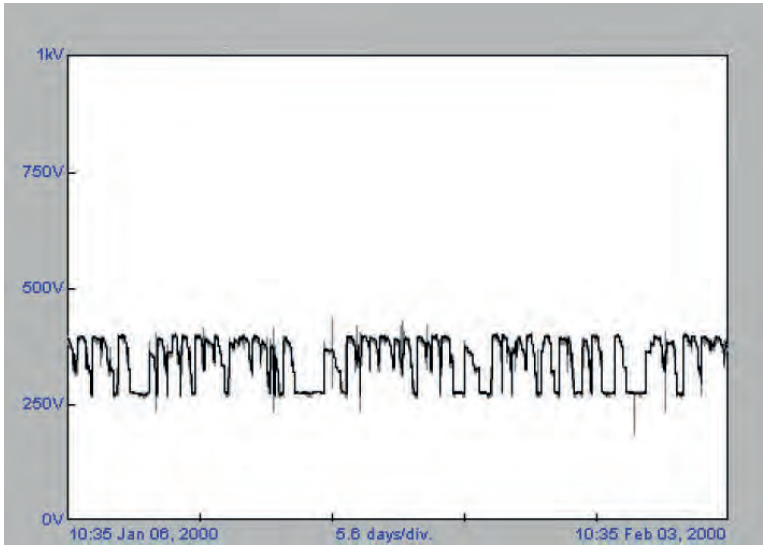

Transients controlled
0 peak events over 700 volts
Peak voltage 660 volts

Elimination of Hazard
Arc Faults on Solidly Grounded Systems

IEEE Std 142 (Green Book)
Recommended Practice for Grounding of Industrial and Commercial Power Systems

1.4.3 The reasons for limiting the current by resistance grounding may be one or more of the following.

To reduce the arc blast or flash hazard to personnel who may have accidentally caused or who happen to be in close proximity to the ground fault.

IEEE Std 141 (Red Book)
Recommended Practice for Electric Power Distribution for Industrial Plants

7.2.2 There is no arc flash hazard, as there is with solidly grounded systems, since the fault current is limited to approximately 5A.

Another benefit of high-resistance grounded systems is the limitation of ground fault current to prevent damage to equipment.

Solidly Grounded Systems

IEEE Std 242 (Buff Book)

- 8.2.2. One disadvantage of the solidly grounded system involves the high magnitude of destructive, arcing ground-fault currents that can occur.

IEEE Std 141 (Red Book)

- 7.2.4. The solidly grounded system has the high probability of escalating into a phase-to-phase or three-phase arcing fault, particularly for the 480V and 600V systems. The danger of sustained arcing for phase-to-ground fault…is also high for the 480V and 600V systems, and low or near zero for the 208V system.

Elimination of Hazard
High Resistance Grounding

High resistance grounding of the neutral limits the ground fault current to a very low level (typically from 1 to 10 amps) and this is achieved by connecting a current limiting resistor between the neutral of the transformer secondary and the earth ground and is used on low voltage systems of 5kV nominal.

By limiting the ground fault current, the fault can be tolerated on the system until it can be located, and then isolated or removed at a convenient time.

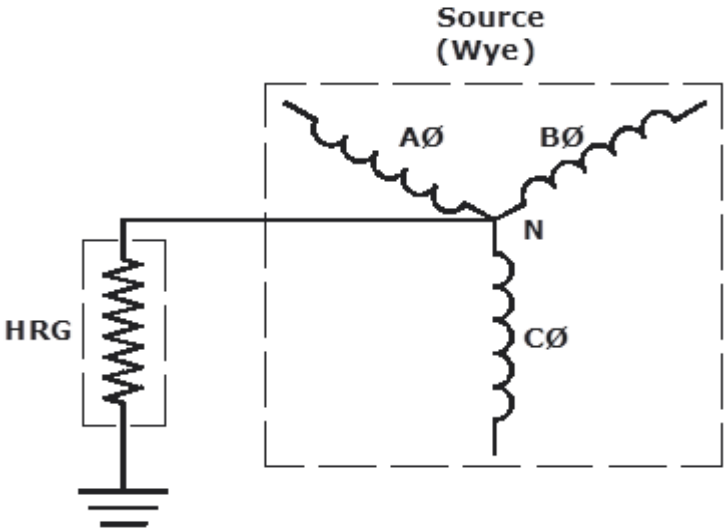

Why I Don’t Use HRG

1. What if I lose the resistor circuit?
2. It takes too long to locate the fault even with pulsing.
3. What if I don’t want the fault to stay on the system indefinitely?
4. What if the fault is intermittent or arcing?
5. What if a second fault occurs?

HRG: What if I lose the Resistor Circuit?

Ground Fault Relay & Sensing Resistor

Detects Open / Short Circuits and annunciates failure of HRG even with circuit breaker open

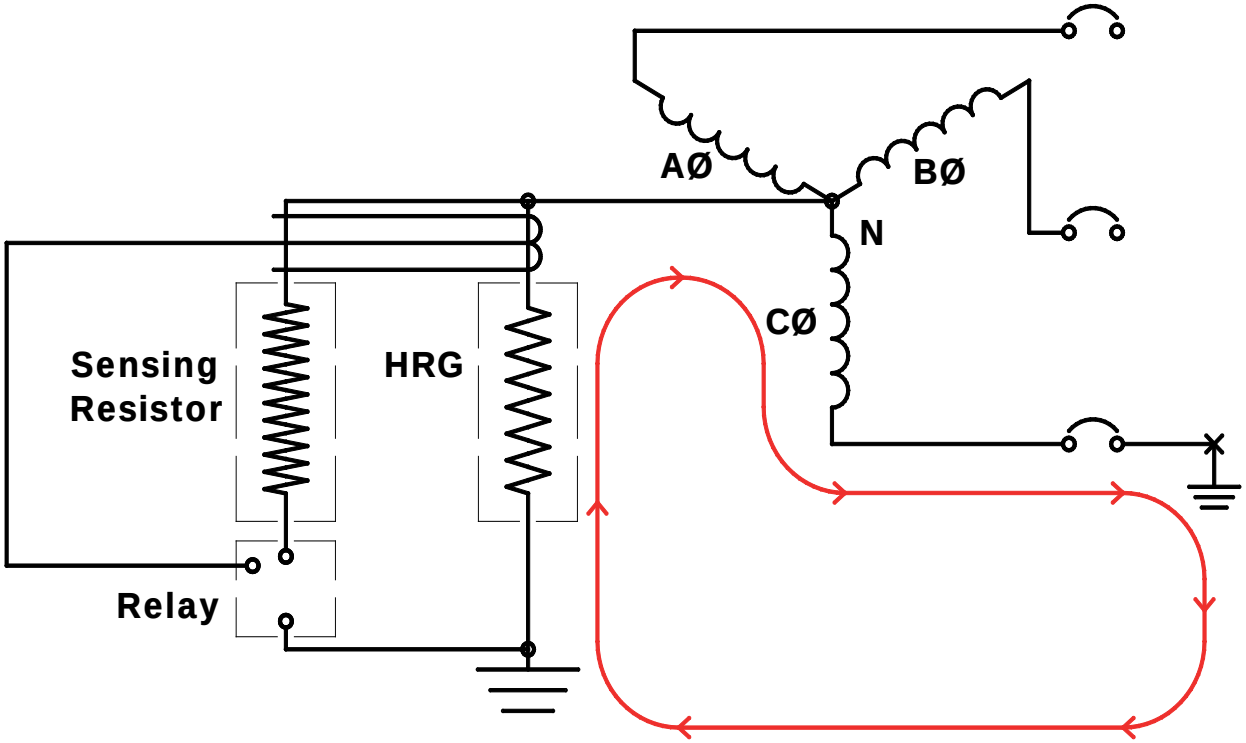

HRG: What if I lose the Resistor Circuit?

In this monitored and **fail-safe circuit**, there is a parallel resistance circuit comprised of two identical resistor paths connected from the neutral to the ground.

The parallel resistance circuit is sized to limit any ground fault to predetermined levels. In the unlikely event that one resistor path fails, the second resistor path continues to limit the ground fault to half of the predetermined levels and still provides full ground fault protection and an alarm indicating resistor failure.

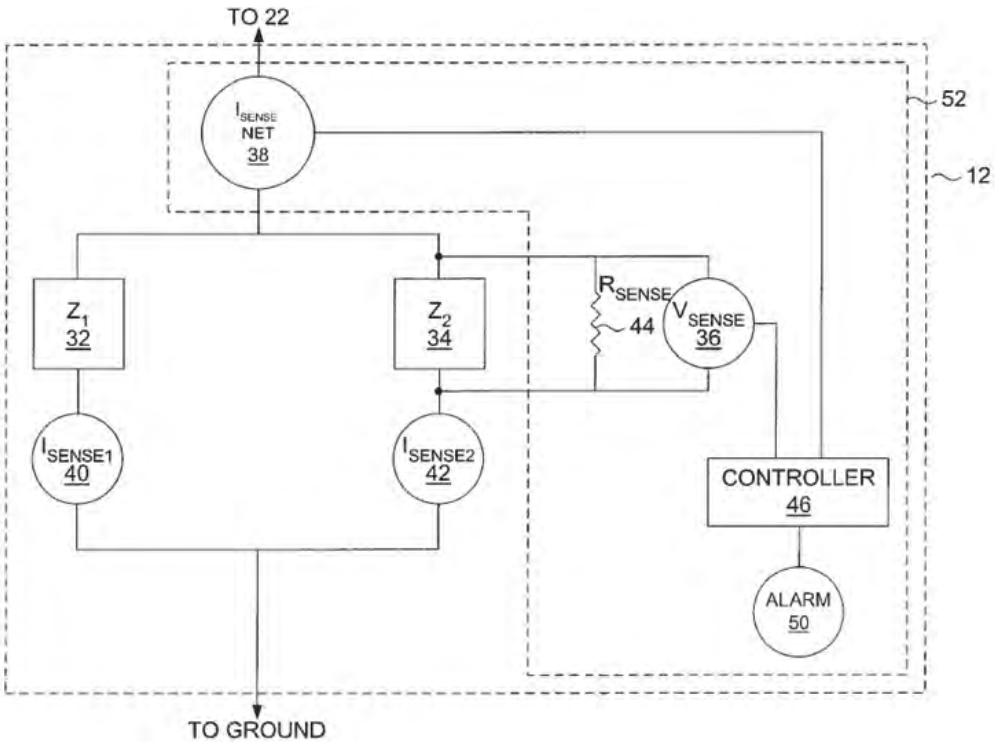

In conjunction with a sensing resistor and a series current transformer, a monitoring relay measures current through the neutral grounding resistor, transformer neutral to ground voltage and NGR resistance for continuity.

This relay has the capability to discriminate between ground faults, resistor failure and open and short circuits. The unit trips in 1.5 seconds when NGR failure is detected. NGR failure is determined when resistance varies to less than 66%or more than 150% of the selected value.

HRG: It takes too long to find the fault

Automatically indicates faulted phase

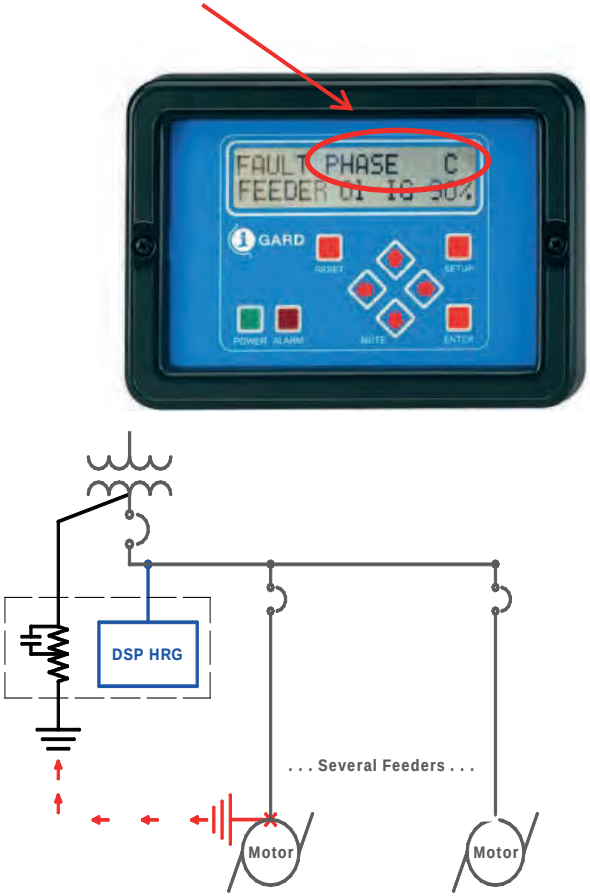

Automatically indicates faulted feeder

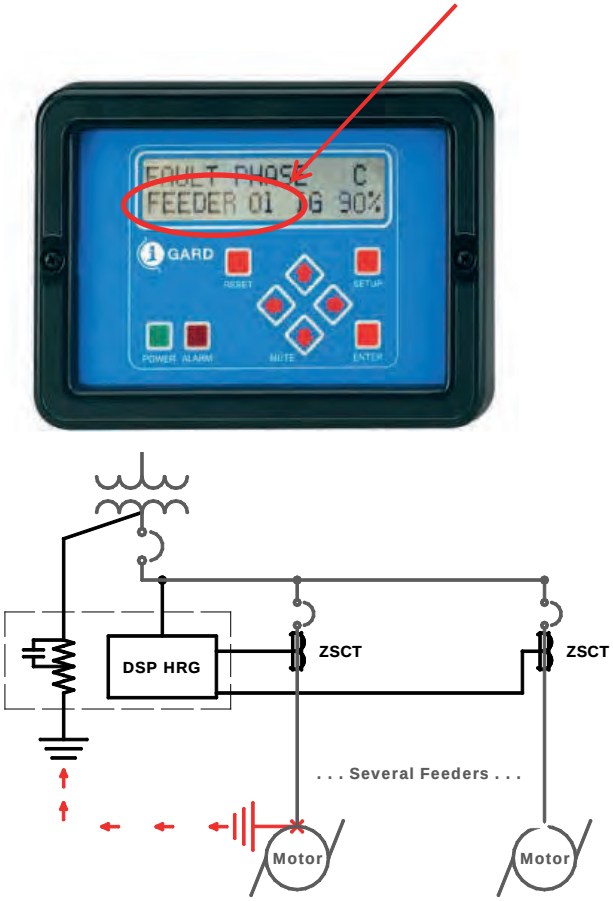

HRG: I don't want the fault to stay on the system indefinitely

Feeder module

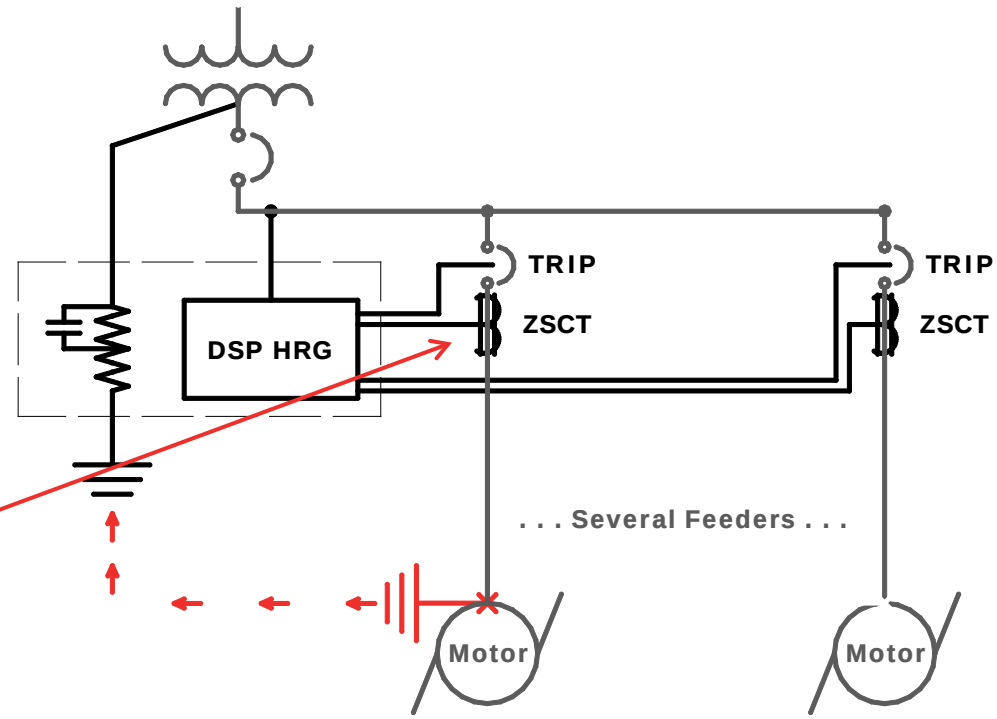

Options for Faulted Feeder:

1) Alarm Only (No Trip)

   OR

2) Trip with Time Delay

3) You set the Time Delay from 1 second to 99 hours

HRG: What if the fault is intermittent or arcing?

Data logging module

1) Feeder Module indicating light latches to indicate intermittent fault.

2) Remote Monitoring. Use Modbus communication to remote monitor the system and the data logging module for trend analysis.

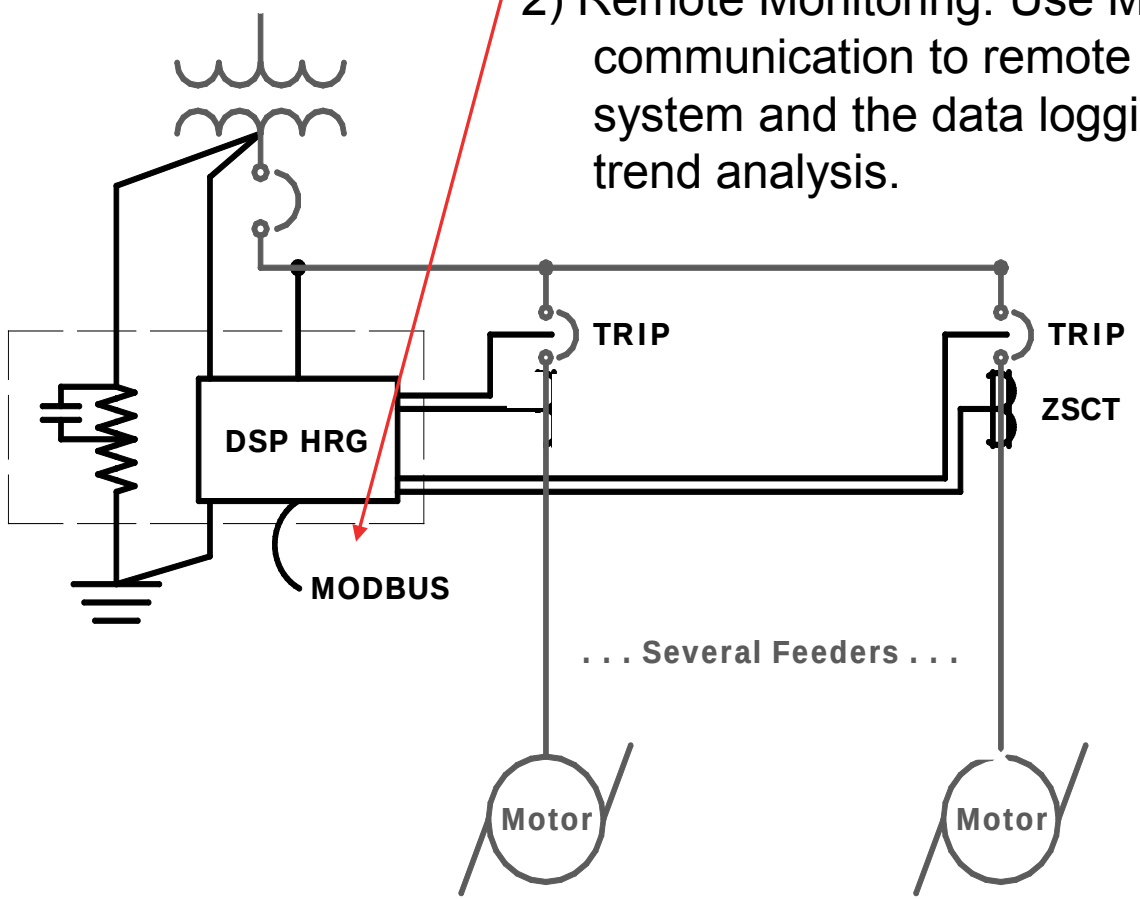

HRG: What if a second ground fault occurs?

Feeder module

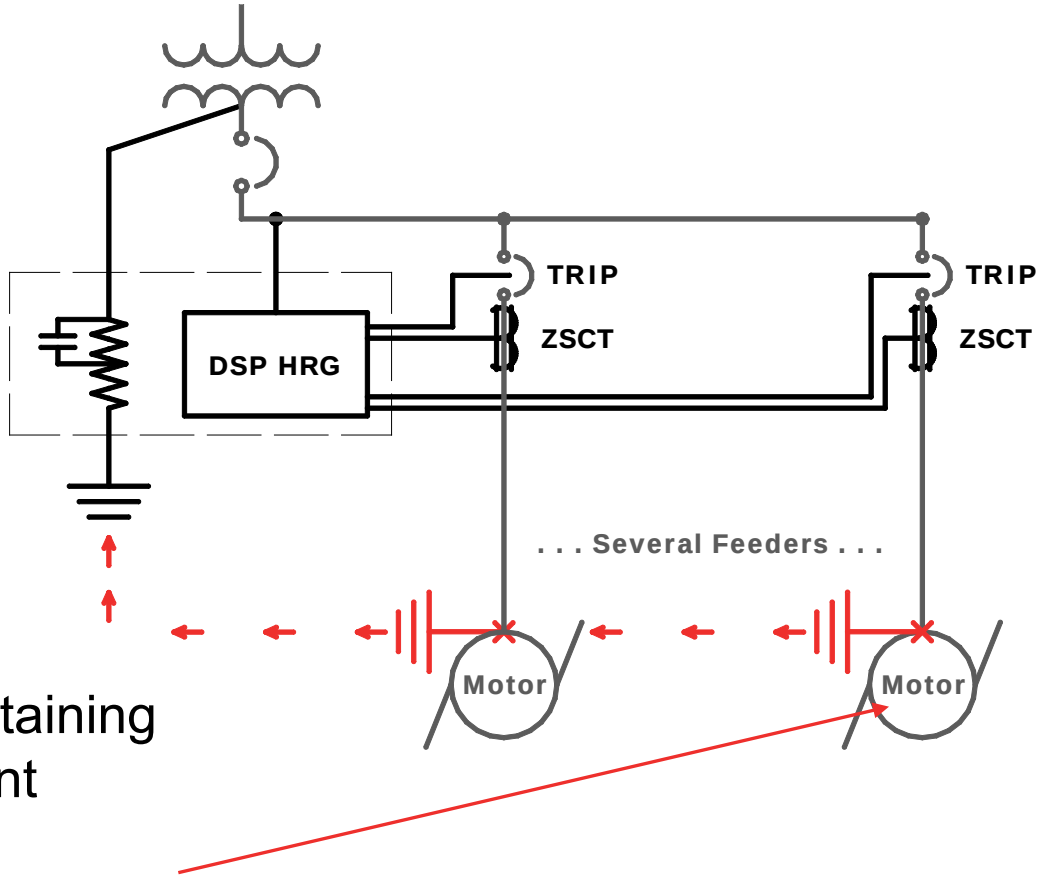

2nd Ground Fault:

- Prioritize Feeders
- Trips least important, maintaining operation on most important
- Up to 50 Feeders
- Reduces the risk of arc flash

ANSI Z10 Hierarchy Reformatted

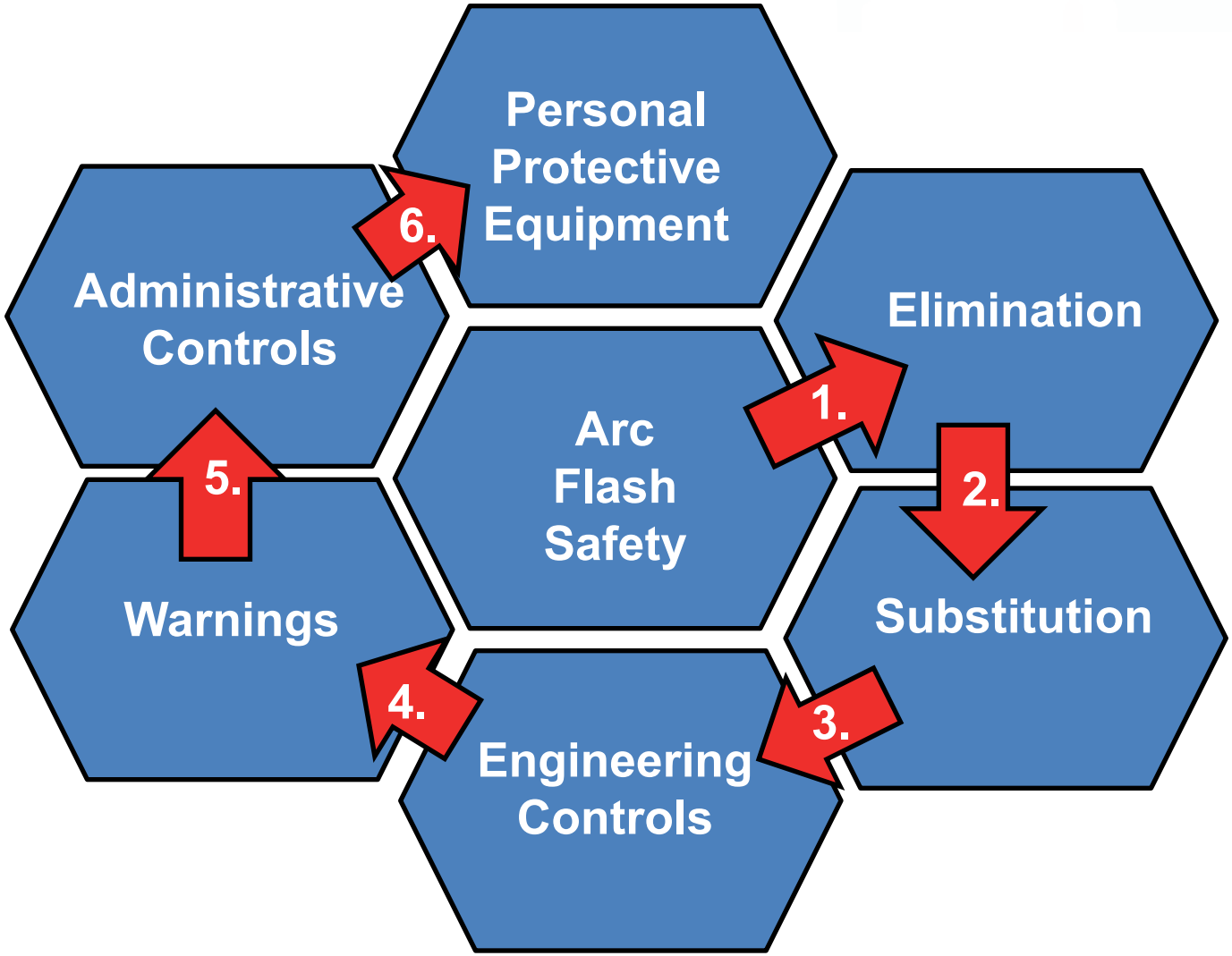

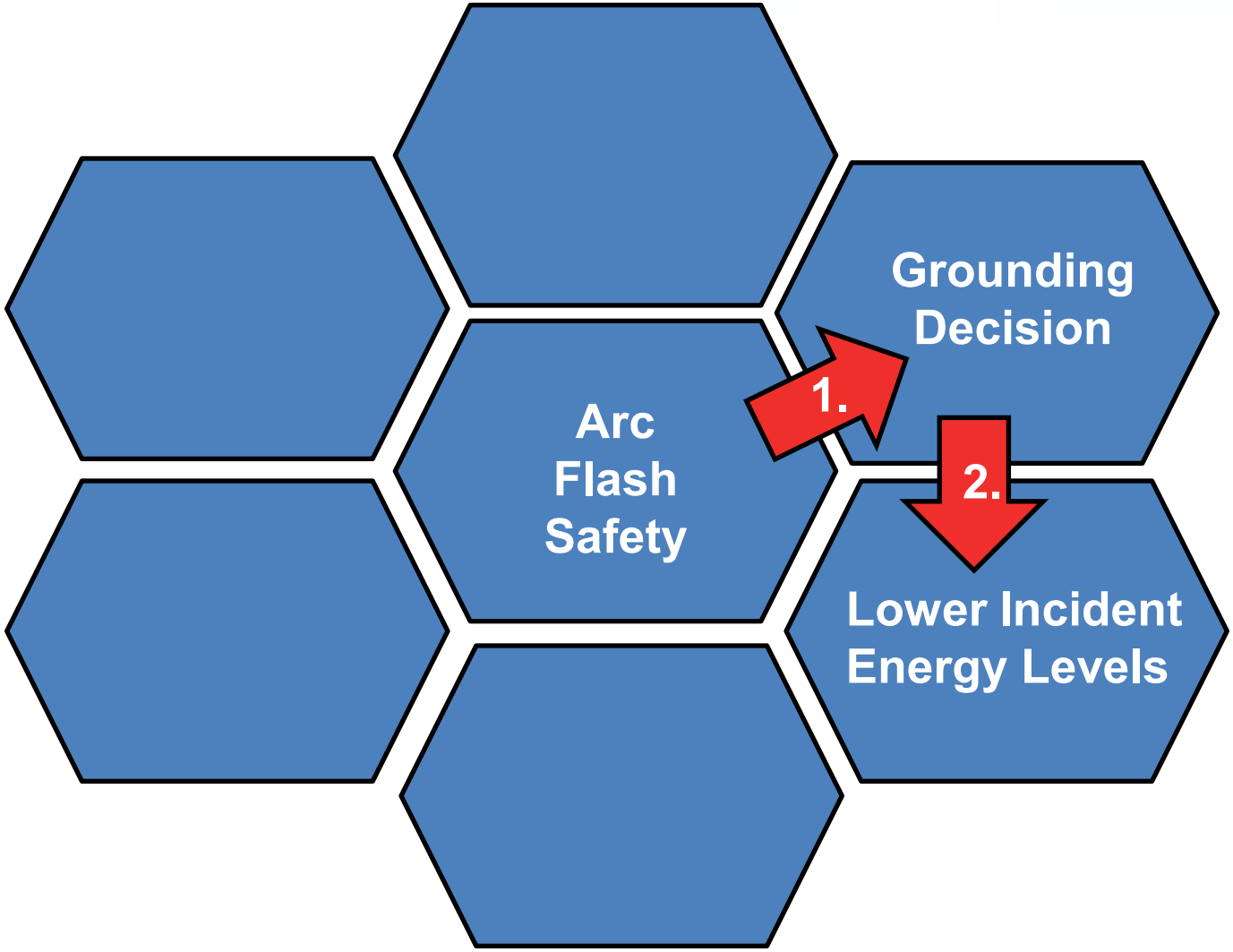
Grounding
Decision
1.
Arc
Flash
Safety
2.
Lower Incident
Energy Levels

Informative Annex O Safety-Related Design Requirements

This informative annex is not a part of the requirements of this NFPA document but is included for informational purposes only.

O.1 Introduction. This informative annex addresses the responsibilities of the facility owner or manager or the employer having responsibility for facility ownership or operations management to perform a risk assessment during the design of electrical systems and installations.

O.1.1 This informative annex covers employee safety-related design concepts for electrical equipment and installations in workplaces covered by the scope of this standard. This informative annex discusses design considerations that have impact on the application of the safety-related work practices only.

O.1.2 This informative annex does not discuss specific design requirements. The facility owner or manager or the employer should choose design options that eliminate hazards or reduce risk and enhance the effectiveness of safety-related work practices.

O.2 General Design Considerations.

O.2.1 Employers, facility owners, and managers who have responsibility for facilities and installations having electrical energy as a potential hazard to employees and other personnel should ensure that electrical hazards risk assessments are performed during the design of electrical systems and installations.

O.2.2 Design option decisions should facilitate the ability to eliminate hazards or reduce risk by doing the following:

(1) Reducing the likelihood of exposure

(2) Reducing the magnitude or severity of exposure

(3) Enabling achievement of an electrically safe work condition

O.2.3 Incident Energy Reduction Methods. The following methods have proved to be effective in reducing incident energy:

(1) Zone-selective interlocking. A method that allows two or more circuit breakers to communicate with each other so that a short circuit or ground fault will be cleared by the breaker closest to the fault with no intentional delay. Clearing the fault in the shortest time aids in reducing the incident energy.

(2) Differential relaying. The concept of this protection method is that current flowing into protected equipment must equal the current out of the equipment. If these two currents are not equal, a fault must exist within the equipment, and the relaying can be set to operate for a fast interruption. Differential relaying uses current transformers located on the line and load sides of the protected equipment and fast acting relay.

(3) Energy-reducing maintenance switching with a local status indicator. An energy-reducing maintenance switch allows a worker to set a circuit breaker trip unit to operate faster while the worker is working within an arc flash boundary, as defined in NFPA 70E, and then to set the circuit breaker back to a normal setting after the work is complete.

O.2.4 Other Methods.

(1) Energy-reducing active arc flash mitigation system. This system can reduce the arcing duration by creating a low impedance current path, located within a controlled compartment, to cause the arcing fault to transfer to the new current path, while the upstream breaker clears the circuit. The system works without compromising existing selective coordination in the electrical distribution system.

(2) Arc flash relay. An arc flash relay typically uses light sensors to detect the light produced by an arc flash event. Once a certain level of light is detected the relay will issue a trip signal to an upstream overcurrent device.

(3) High-resistance grounding. A great majority of electrical faults are of the phase-to-ground type. High-resistance grounding will insert an impedance in the ground return path and will typically limit the fault current to 10 amperes and below (at 5 kV nominal or below), leaving insufficient fault energy and thereby helping reduce the arc flash hazard level. High-resistance grounding will not affect arc flash energy for line-to-line or line-to-line-to-line arcs.

(4) Current-limiting devices. Current-limiting protective devices reduce incident energy by clearing the fault faster and by reducing the current seen at the arc source. The energy reduction becomes effective for current above the current-limiting threshold of the current-limiting fuse or current limiting circuit breaker.

Incident Energy Reduction Methods:

- ✓ Zone-selective interlocking
- ✓ Differential relaying
- ✓ Energy reducing maintenance switch
- ✓ Energy reducing active arc mitigation
- ✓ Arc flash relay
- ✓ Current limiting devices

Active Arc Mitigation

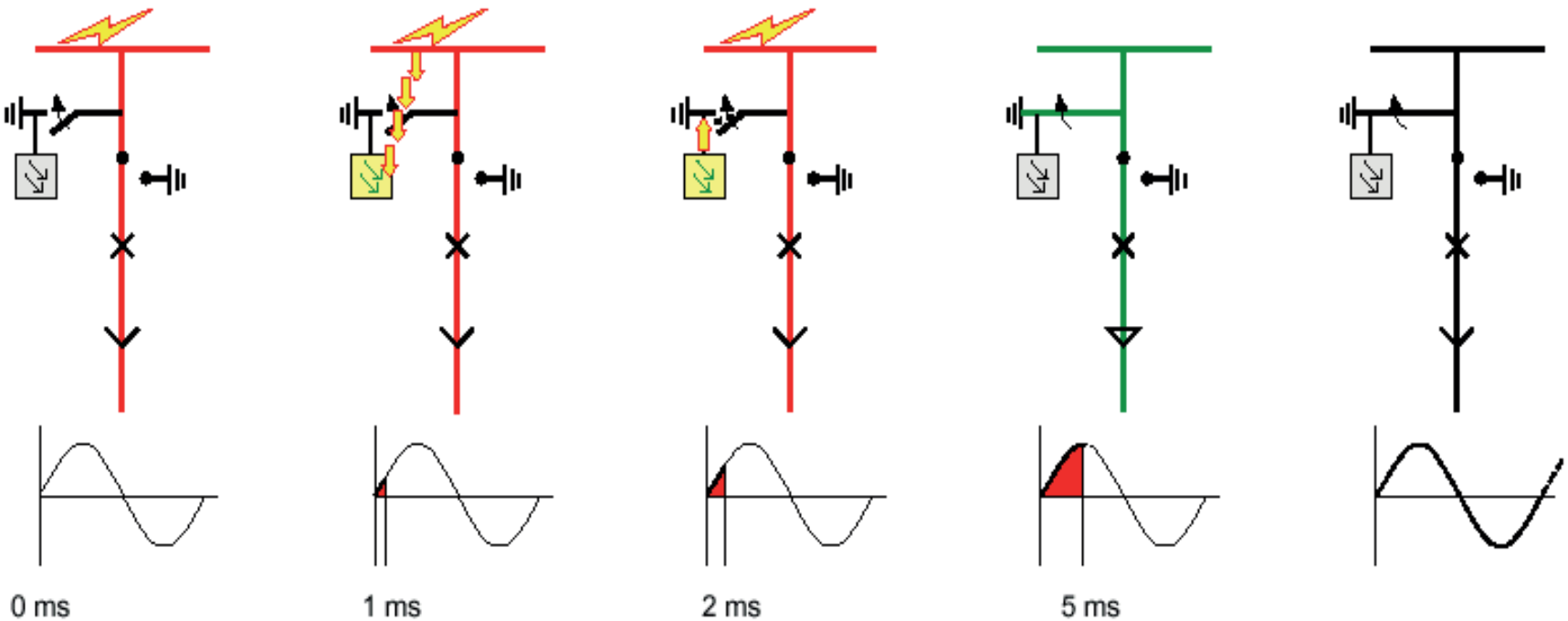

Arcing starts.

The sensors detect the arc.

The tripsignal is sent.

All the phases connected to ground.
The arc is extinguished.

The shortcircuit current is disconnected within less than 3-5 cycles.

Incident Energy without Arc Mitigation

Without Crowbar Arc Mitigation

After 100-1000 ms: Cubicles, apparatus and sometimes the building are damaged and have to be repaired.

After 100-1000 ms
The fault is cleared by the upstream breaker. During the arcing period the hot gases and melted material is a threat to operator's life. Inspection, repair and replacement might require several weeks.

Incident Energy with Crowbar

With Crowbar

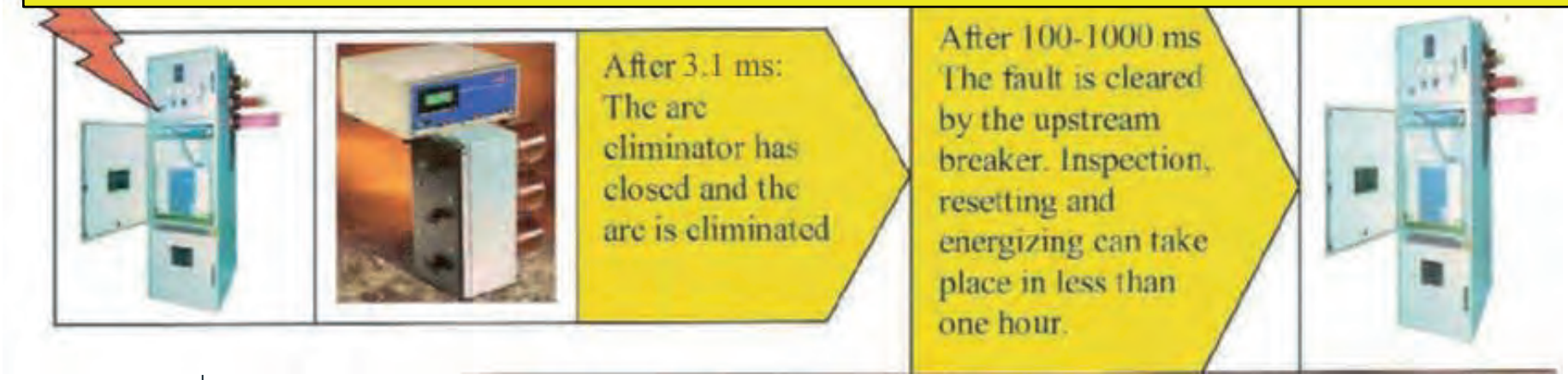

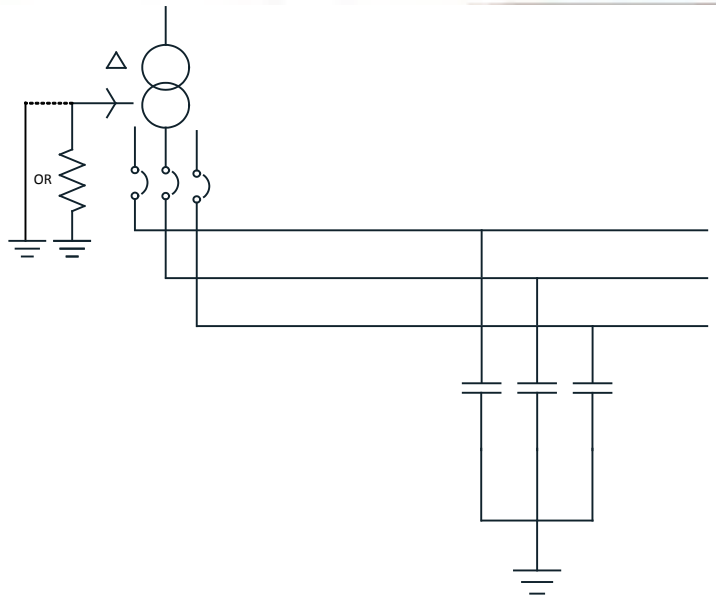

Based on 50kA, bolted fault, 18inches

Possible concern over mechanical stresses due to creating a zero impedance, 3 phase bolted fault.

Hazard clearing time: 3.1 ms ~ 0.257 cal/cm^2

Incident Energy with Controlled Crowbar

With Controlled Crowbar

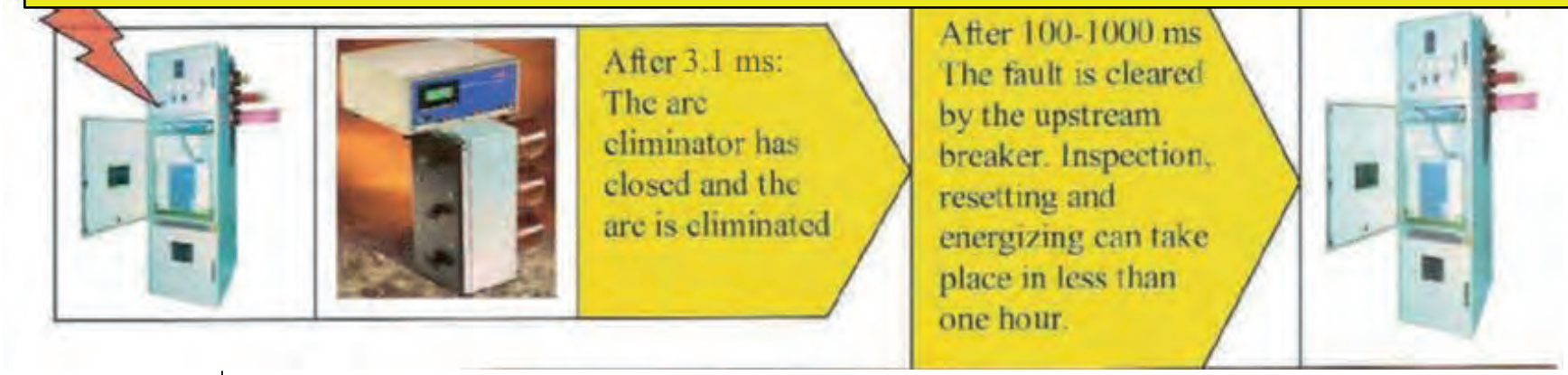

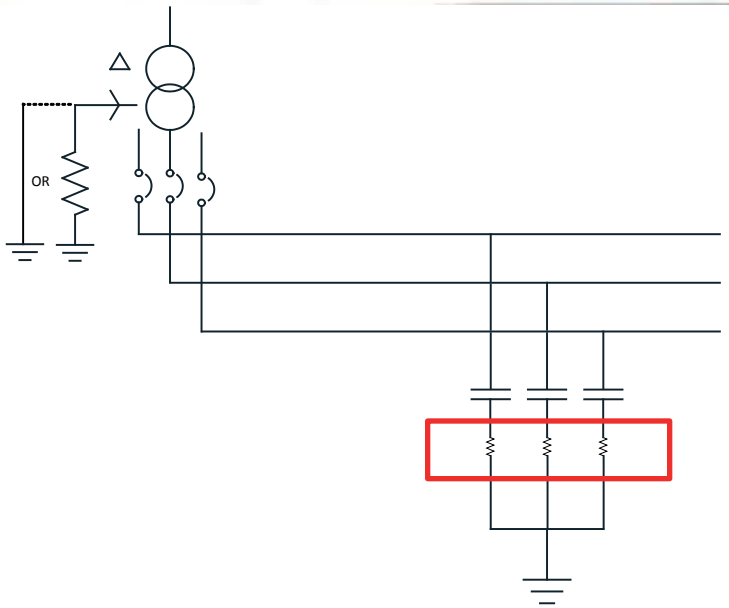

Based on 50kA, bolted fault, 18 inches

Hazard clearing time: 3.1 ms ~ 1.17 cal/cm^2

Addresses concern over mechanical stresses due to creating a zero impedance, 3 phase bolted fault.

Optima Arc Mitigation System

The Optima system combines a solid state switch connected in parallel with a resistance for incident energy limitation during an arcing fault.

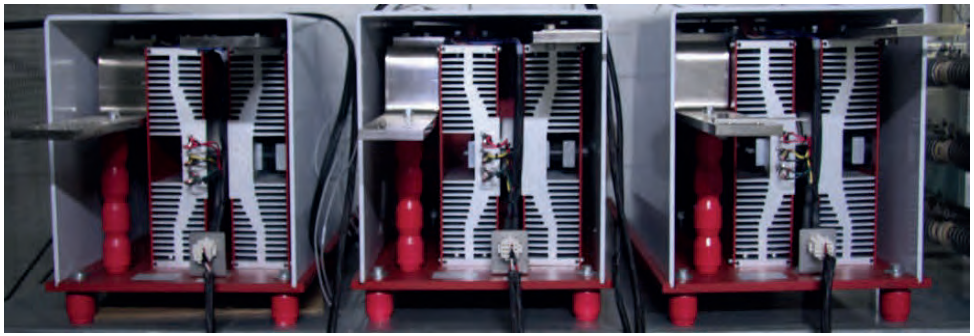

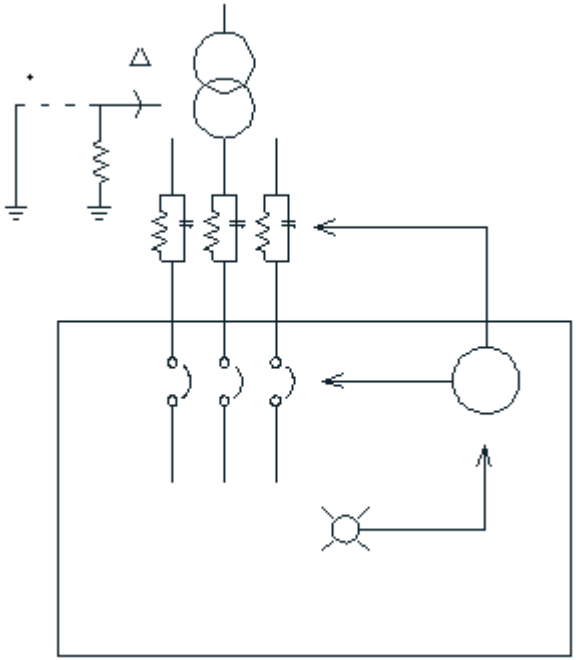

Based on 50kA, bolted fault, 18 inches

Solid state switch opening time:
8.0ms ~ 0.70 cal/cm^2

Introduces additional impedance for reduction of bolted fault downstream

Solid state switch continuously rated for ampacity of switchgear

Tested to minimum 10,000 operations

Arc Damage versus Arc Duration

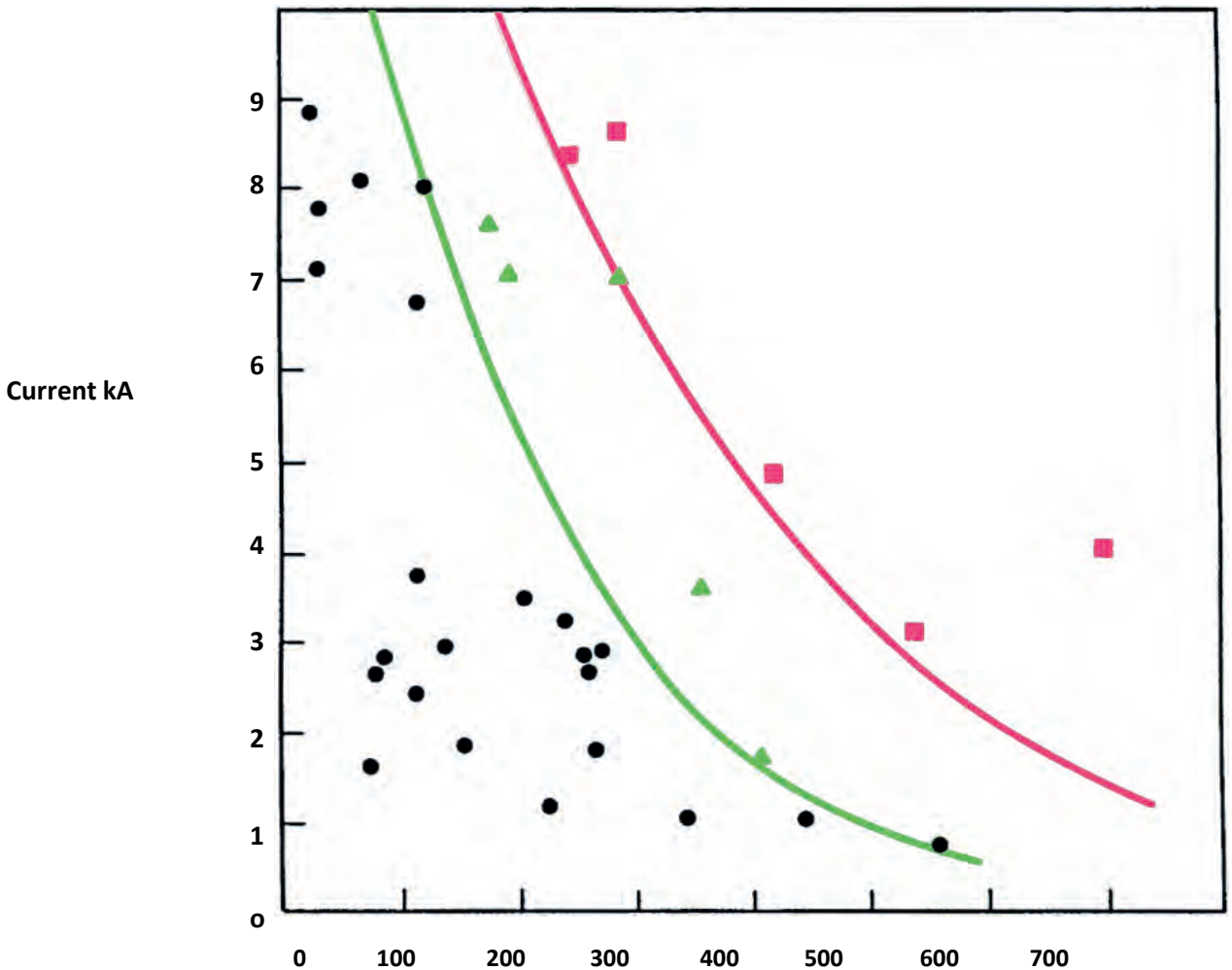

An arc is developed within milli-seconds and leads to the discharge of enormous amounts of destructive energy. The energy in the arc is directly proportional to the square of the short-circuit current and the time the arc takes to develop.

Reduce the Time,

Reduce the Damage,

Reduce the Incident Energy.

Total Clearing Time is Critical

Reduce the Time	Reduce the Damage	Reduce the Incident Energy
-35 ms:	no significant damage to persons or Switchgear, which can often be returned to use after checking the insulation resistances	2.9 Cal /cm2
- 100ms:	small damage, requires cleaning and possibly some minor repair likely	8.31 Cal/cm2
- 500ms:	large damage both for persons and the switchgear, which must be partly replaced.	41.58 Cal/cm2

The arc burning time is the sum of the time to detect the arc and the time to open the correct breaker.

***Based on 50kA maximum bolted fault current on a 480 volt solidly grounded system @ 18 " Working distance.**

Optical Detectors

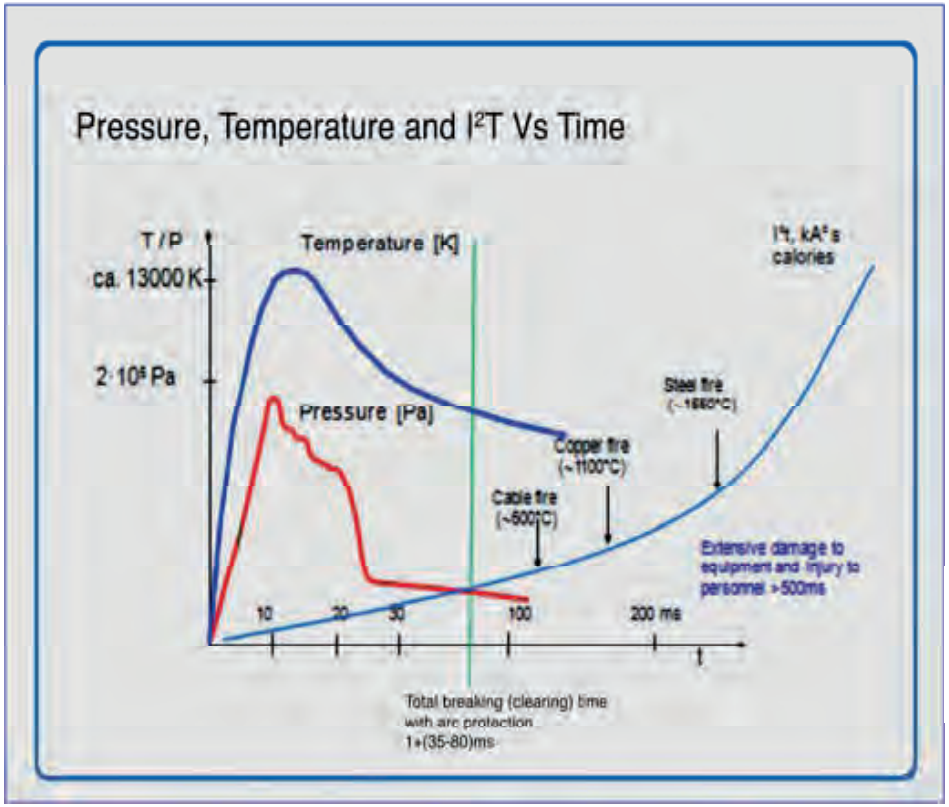

An arc is accompanied by radiation in the form of light, sound, and heat.

Therefore, the presence of an arc can be detected by analyzing visible light, sound waves, and temperature change.

To avoid erroneous trips, it is normal to use a short-circuit current detector along with one of the aforementioned arc indicators.

The most common pairing in North America is current and light and in Europe it is common to employ light and pressure.

Optical or Pressure Sensors

Arcing is accompanied by radiation in the form of light, sound, heat and electromagnetic waves as well as an associated pressure wave.

- **The energy developed by the internal arc generates heat and pressure; ex:**

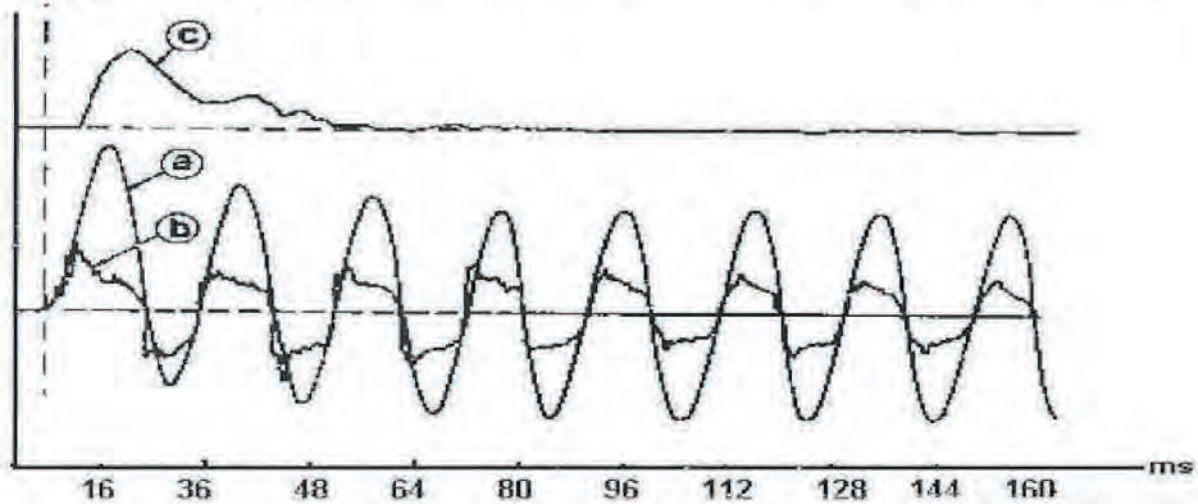

- **a: short circuit current (phase with max asymmetry)**
- **b: arc voltage**
- **c: internal pressure**

Arc Flash Relay

Ground Fault Protection, Zone Interlocking Protection (ZSIP) Remote Monitoring and Arc Flash Mitigation all in one relay

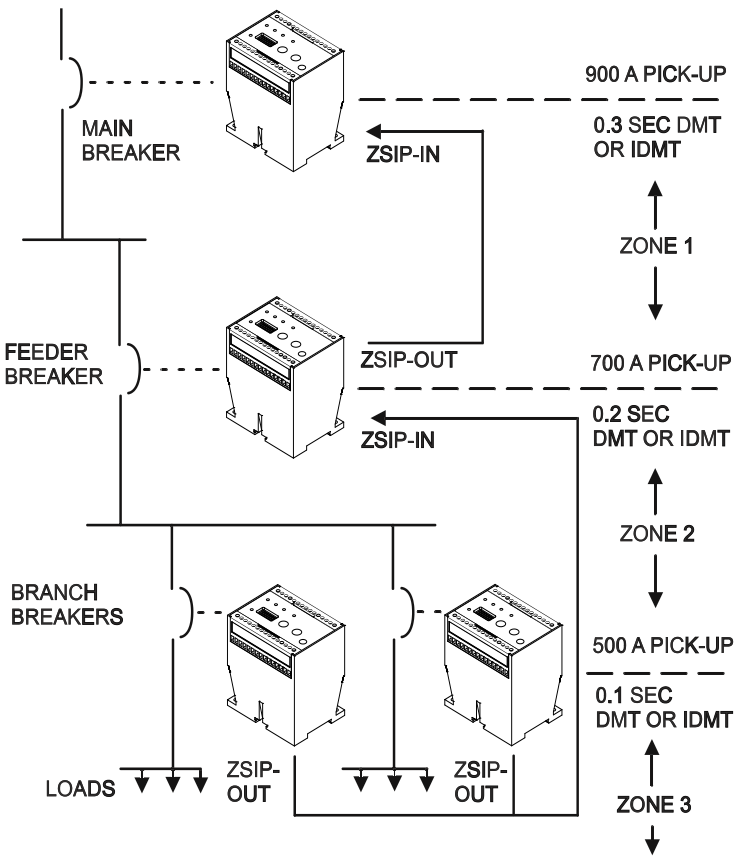

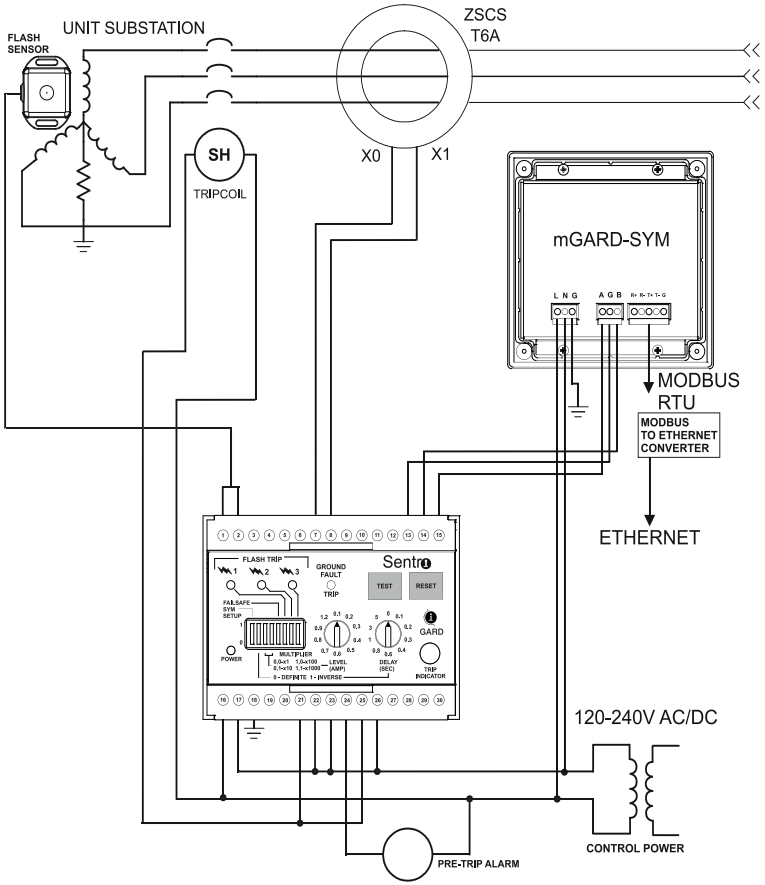

www.i-gard.com

Incident Energy

Protection Type	Clearance Time	Incident Energy
Maximum	2.0 seconds	167 Cal / cm^2
Over-Current	0.45 seconds	5.4 Cal / cm^2
Pressure Sensor	0.058 seconds	1.3 Cal / cm^2
Optical Arc Detection	0.051 seconds	1.2 Cal / cm^2

***Assumes circuit breaker interrupting time of 0.05 seconds**

Based on 50kA, bolted fault, 18inches

Reduction in Incident Energy with Active Arc Control

Protection Type	Mitigation Time	Incident Energy
Arc Quenching	0.0031 seconds	0.257 Cal / cm^2
Alternative Arc Control	0.0031 seconds	1.17 Cal / cm^2
Optima Arc System	0.008 seconds	0.70 Cal / cm^2

Assumes circuit breaker interrupting time of 0.05 seconds

Based on 50kA, bolted fault, 18inches

ANSI Z10 Hierarchy Reformatted

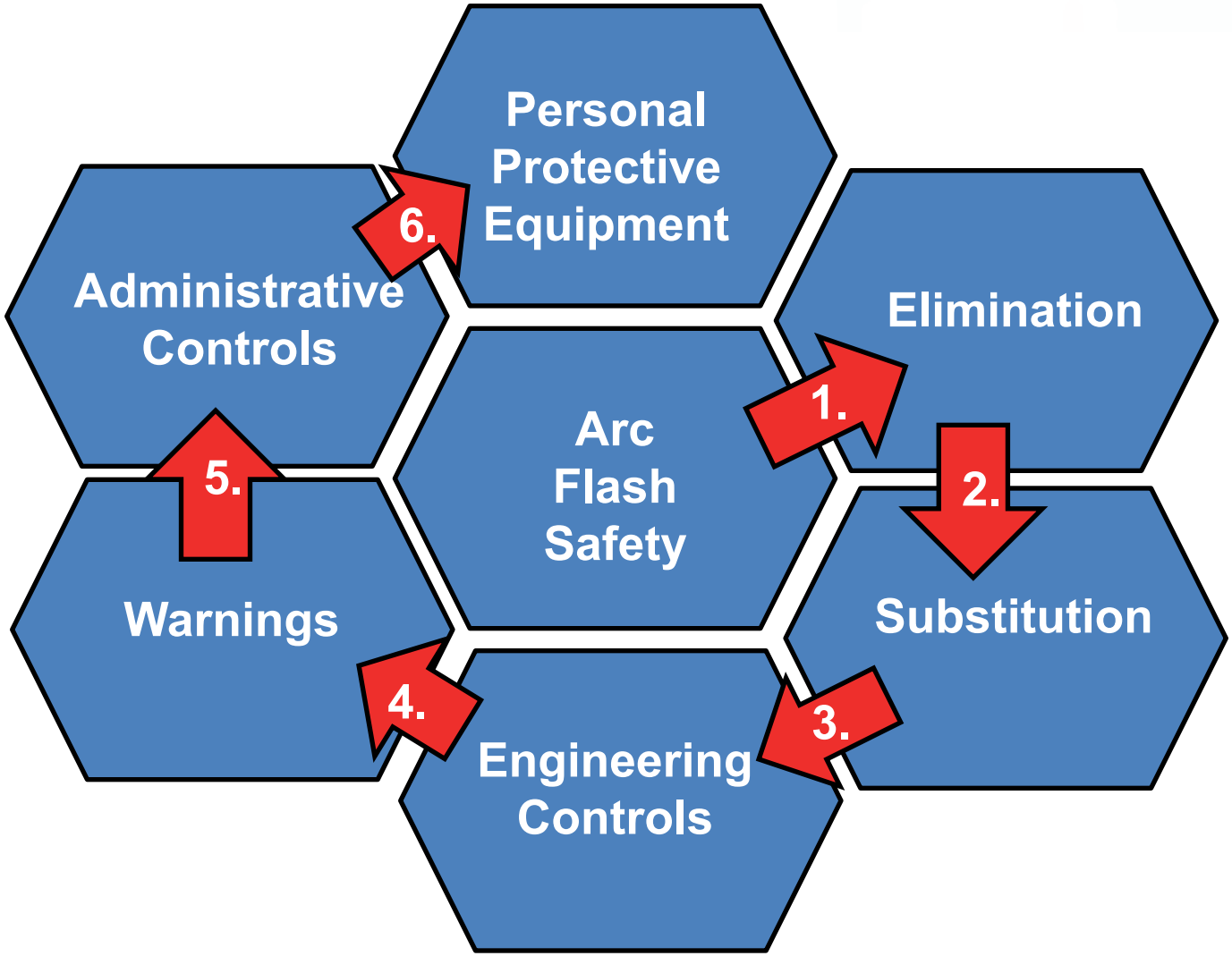

ANSI Z10 Hierarchy Reformatted

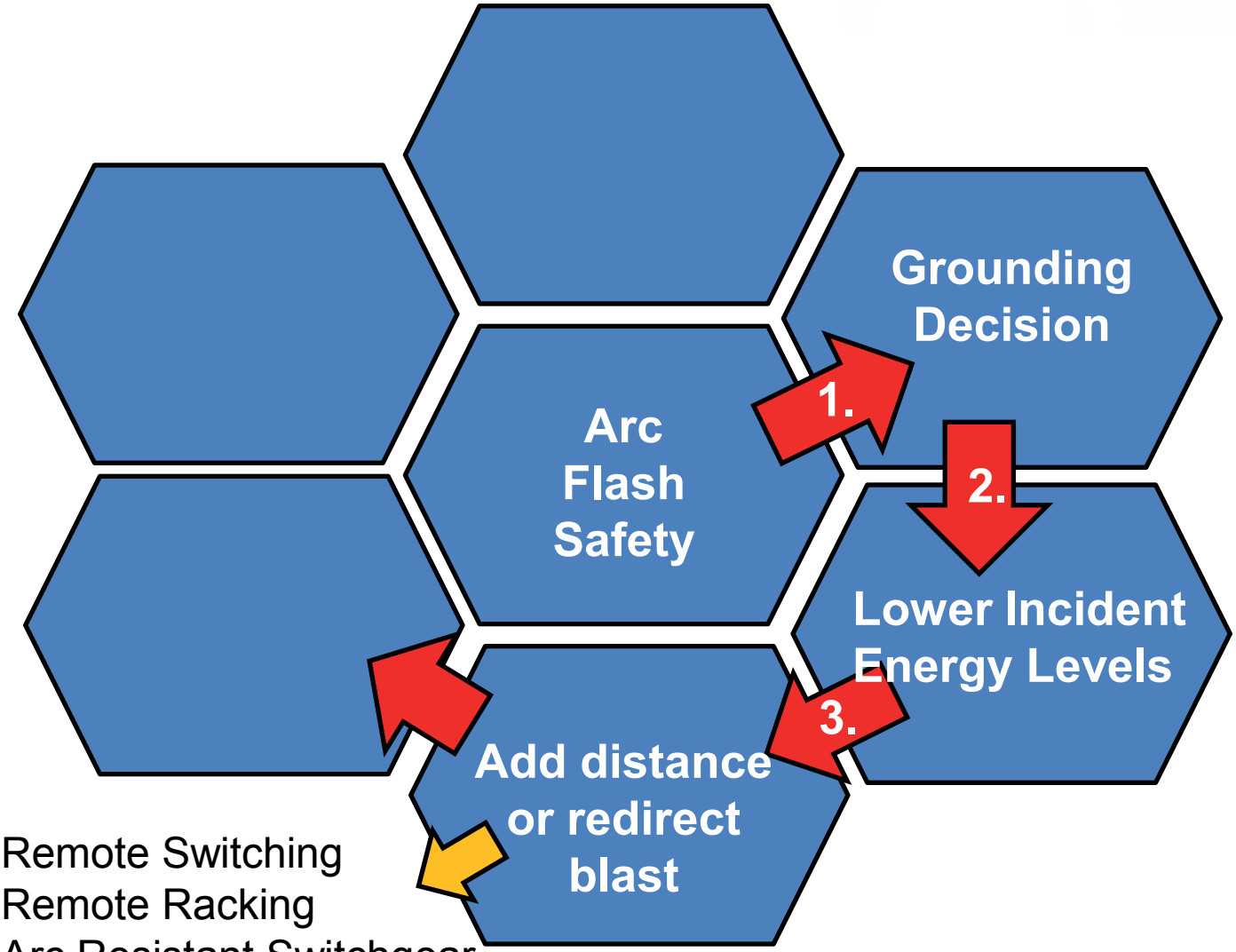

Remote Switching
Remote Racking
Arc Resistant Switchgear

Technology	Reduces the Likelihood of Exposure	Reduces the Severity of the Arc Flash Hazard	Protects Personnel in the event of an Arc Flash	Remarks
Zone Selective		✓		
Differential Relay		✓		
Maintenance Switch		✓		Manual operation required
Active Arc Mitigation		✓		
Arc Flash Relay		✓		Fast automatic operation
High Resistance Grounding	✓			**Risk reduction by design, eliminate up to 95% of occurrences**
Current Limiting Fuse		✓		Under specific operating conditions
Remote Switching			✓	Removes personnel from danger zone
Remote Racking			✓	Removes personnel from danger zone
Arc Resistant Switchgear			✓	Redirects blast away from personnel, although equipment is damaged.

ANSI Z10 Hierarchy Reformatted

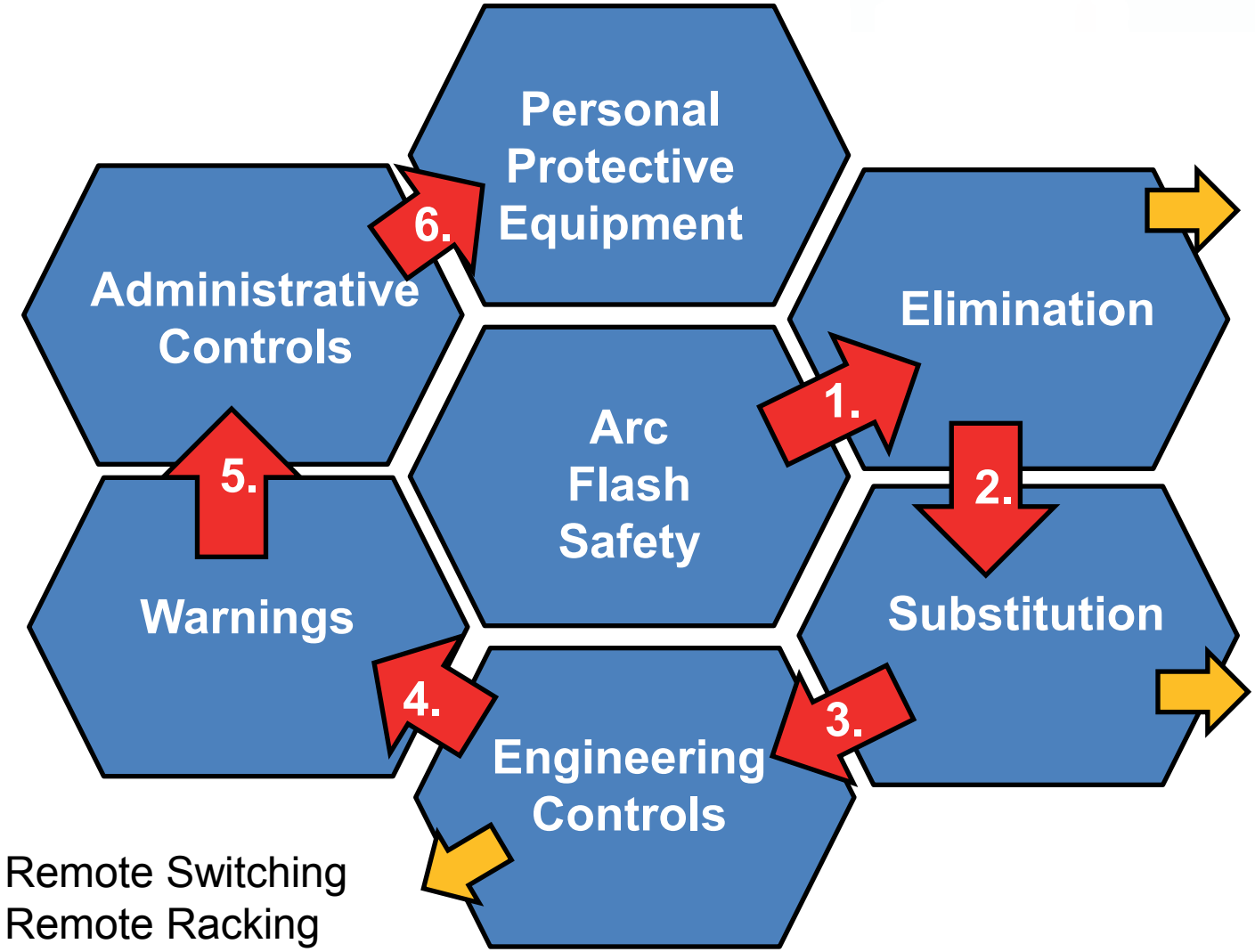

Select High Resistance Grounding

Zone Selective, Maintenance Switch Active Arc Mitigation Arc Flash Relay Current Limiting Fuse

Remote Switching
Remote Racking
Arc Resistant Switchgear

ANSI Z10 Hierarchy Reformatted

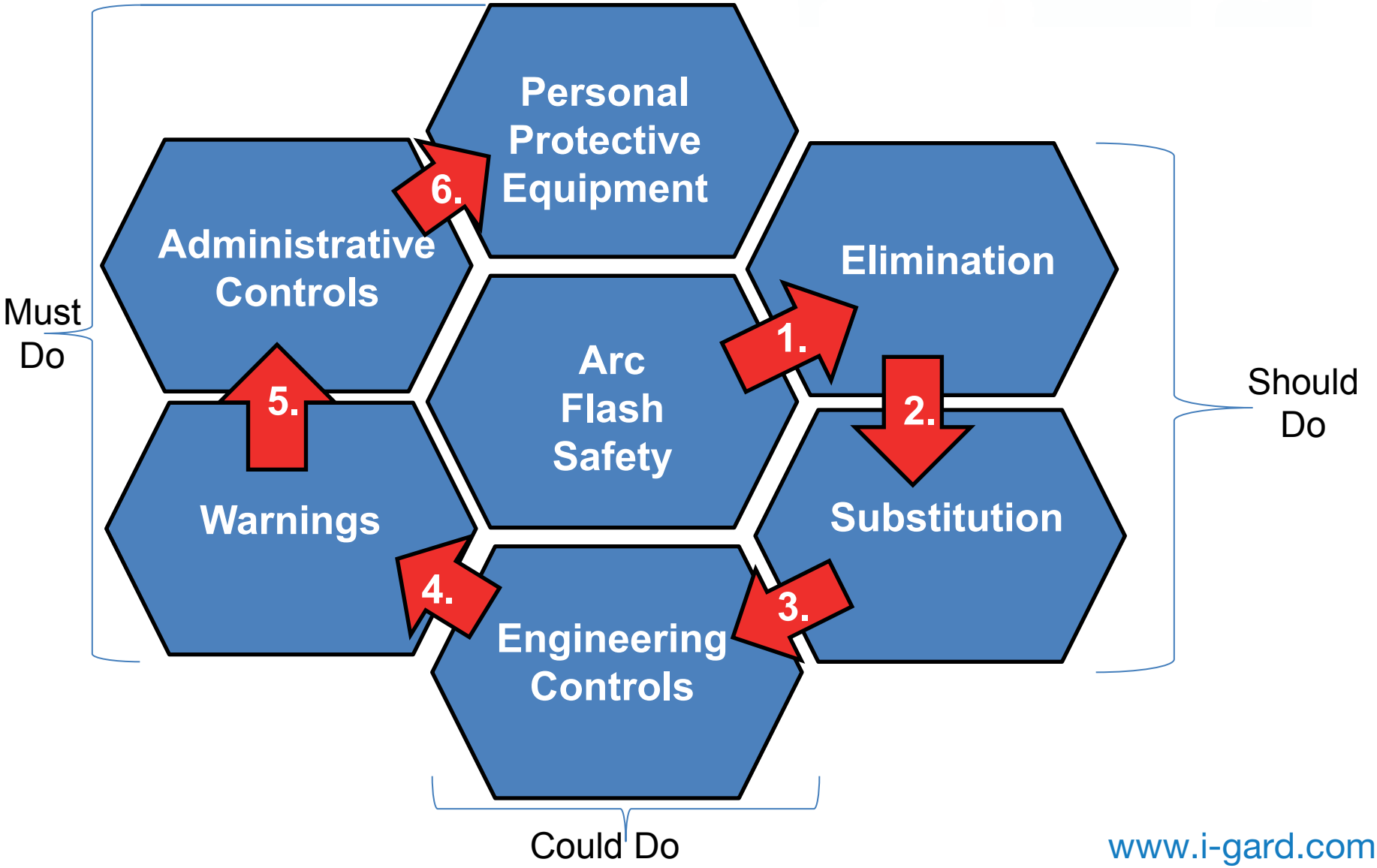

Thank You

Questions?

For comments or product information, please contact: marketing@i-gard.com