GARD

Unparalleled Protection

SENTINEL

HIGH RESISTANCE GROUNDING

HIGH RESISTANCE GROUNDING

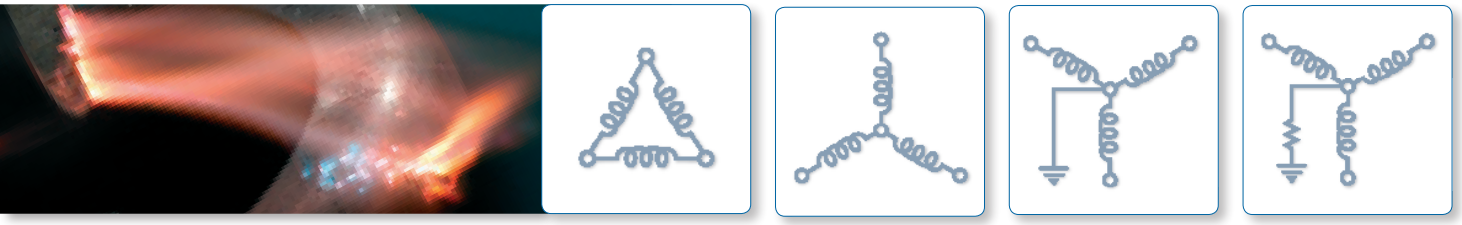

C-107EM Instruction Manual, January 2015

ABOUT I-GARD

I-Gard's commitment to electrical safety provides both industrial and commercial customers with the products needed to protect their electrical equipment and the people that operate them.

As the only electrical-safety focused company whose product portfolio includes neutral grounding resistors, high-resistance grounding systems and optical arc mitigation, we take pride in our technologies that reduce the frequency and impact of electrical hazards, such as arc flash and ground faults.

For those customers who have purchased from us over the last 30 years, you know us for the quality and robustness of our products, our focus on customer service and technical leadership. We build on this foundation by investing in developing new products in electrical safety education - including EFC scholarship program - by actively participating in the IEEE community programs on technical and electrical safety standard, and working with local universities at discovering new technologies. We remain unrelenting in our goal of improving electrical safety in the workplace.

Our commitment to excellence is validated by long-standing relationships with industry leaders in fields as diverse as petroleum and gas, hospitals, automotive, data centers, food processing, aerospace, water and waste water plants, and telecommunications. We provide our customers with the product and application support required to ensure that their electrical distribution system is safe and reliable.

TABLE OF CONTENTS

SUBJECT PAGE

FIGURES

1. GENERAL DESCRIPTION

I-Gard Sentinel is designed to detect and alarm the occurrence of a ground fault, to identify the faulted feeder and to provide selective second ground fault tripping. In addition to other operational and safety features, the Sentinel, through the pulsing feature, allows maintenance personnel to locate the fault and to isolate it promptly. The Sentinel system can assist in locating the fault with pulsing circuitry. In the event of a second ground fault, the Sentinel acts quickly to prevent the loss of two feeders by selectively tripping the lower priority feeder only.

MODBUS communications allows the operator to remotely monitor which feeder is faulted and to monitor the leakage currents of all feeders for trending purposes. The cyclic pulsing combined with the hand held current sensor, and a single line diagram can be used to rapidly locate a ground fault even in complex power distribution systems.

The Sentinel system includes a DSP-OHMNI system consisting of digital display mounted at the front panel and a number of modules mounted inside the Sentinel enclosure. The modules are connected together through 20-conductor standard ribbon cable. A panel-mounted display module provides a human interface to the system and communications on RS-485 common port which allows set-up and control. There are five DSP-OHMNI modules as follows:

- DSP-DM Display Module
- DSP-DPS Power Supply
- DSP-DSM System Module
- DSP-DFM Feeder Module
- DSP-DRM Resistor Monitor

DSP System can be expanded to 50 feeders for large installations, each branch with a dedicated feeder module and sensitive zero-sequence current sensor. The digital display indicates the faulted phase, the total system leakage current in percent of the let through current of the OHMNI-PM and provides other information such as priority settings and the neutral grounding resistor setting. It is used to program the system and to provide manual control of the pulsing function.

The feeder modules measure the fault current level in the branch circuits that are protected. These modules use standard I-Gard zero sequence current sensors Type T2A, T3A, T6A and T9A (sold separately). Each feeder module is equipped with a form C contact, 10A relay that is normally used for tripping the protective breaker. The DSP-DFM detects two fault levels. Firstly it detects the single fault, which creates a system alarm condition, and secondly through a priority level system it provides breaker control to disconnect the least important circuit breaker.

Communication is provided by a 2-wire or a 4-wire RS-485 network from a jack located at the rear of the DSP-DM Display Module connected to the terminal block for easy customer connection. The communications protocol supported is MODBUS RTU, which is a master/slave system with selectable baud rates from 4800 to 19200. The DSP supports the MODBUS function read holding registers only, without exception support. Additionally it will support remote RESET using the force coil function.

The DSP system is used in conjunction with a voltage sensing unit type DDR2. The DDR2 matches the DSP-DSM input circuits to the system voltage. The most common types are the following:

TYPE	SYSTEM VOLTAGE
DDR2-1	120 V*
DDR2-2	240 V
DDR2-4	480 V
DDR2-6	600 V

*Also used with potential transformers for higher voltage systems.

The DDR2 provides output voltages VAG, VBG, VCG that are proportional to the phase to ground voltage and also voltage VNG that is proportional to voltage across the neutral resistor (i.e. Total leakage/fault current of the system).

The current-limiting resistance is connected between the ground and the neutral point of the transformer on Wye systems. On delta systems an artificial neutral device (I-Gard Type DDAI) is required to provide a neutral point.

The DDAI device is selected for appropriate 'let-through' current, i.e.: the current, which will flow to ground, if there is a short circuit from line to ground.

DDAI device is available for continuous currents of 1 ampere to 10 amperes for system voltages listed above. For further information regarding the use of this device refer to: *Instruction Manual Type DDAI Artificial Neutrals C-430EM.*

2. HIGH-RESISTANCE GROUNDING

Some electrical codes allow continuous operation of the electrical system with one phase faulted to ground provided that certain limitations on the system voltage and ground fault current are met, including a requirement to locate and isolate the ground fault as fast as possible.

In a similar fashion, the Canadian Electrical Code, Part 1, C22.1 and the National Electrical Code, NFPA 7, allow the use of high-impedance grounding neutral systems up to 1000VAC where the ground fault current is limited to 5A or less. These new changes to the electrical code allow users of the I-Gard Sentinel to maintain a ground fault current of 5A or less on their electrical distribution system without interruptions caused by a single ground fault, thereby avoiding unscheduled shutdowns and production interruptions. I-Gard Sentinel users can locate, isolate and repair faulty equipment at convenient time.

The reason for limiting ground fault current by resistance grounding may be one or more of the following, as indicated in IEEE Std. 142-1991, IEEE Recommended Practice for Grounding of Industrial and Commercial Power Systems. pp. 25-26:

1) To reduce burning and melting effects in faulted electric equipment, such as switch gear, transformers, cables, and rotating machines.
2) To reduce mechanical stresses in circuits and apparatus carrying fault currents.
3) To reduce electric-shock hazards to personnel caused by stray ground-fault currents in the ground return path.
4) To reduce arc blast or flash hazard to personnel who may have accidentally caused or who happen to be in close proximity to the ground fault.
5) To reduce the momentary line-voltage dip occasioned by the occurrence and clearing of a ground fault.
6) To secure control of transient over voltages while at the same time avoiding the shutdown of a faulty circuit on the occurrence of the first ground fault.

Figure 1: Interior View

3. INSTALLATION

I-Gard Sentinel is housed in a NEMA 3R (IP-33) indoor rated enclosure containing the neutral grounding resistor, ground fault relay and isolation switch. Upon receipt, carefully open the protective shipping carton, remove all packing material and visually inspect the assembly. If the unit is damaged, immediately process a claim with the freight company. Do not proceed with installation. Contact I-Gard Corporation at the numbers listed on the final page of this document.

Turn the Isolation Switch to OFF position and loosen the two door bolts to open the front door to access the mounting holes.

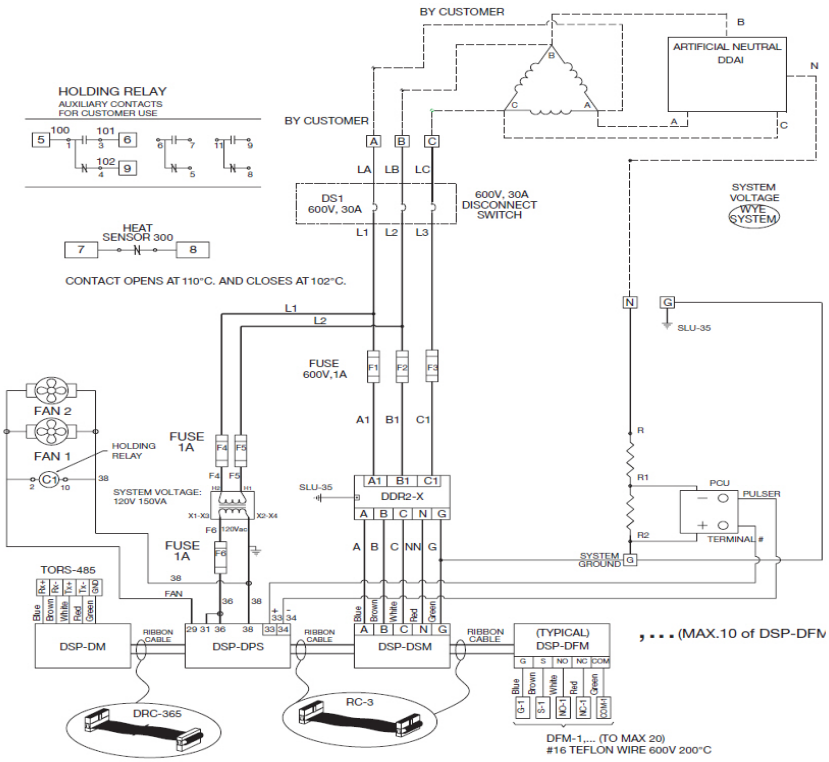

Figure 2: Sentinel Schematic Delta Connection

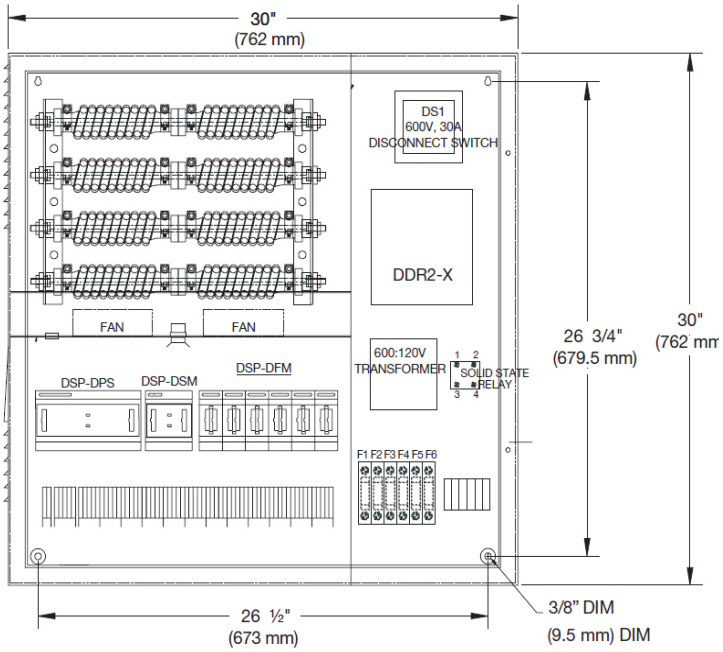

Figure 3: Mounting Holes Dimensional Details

The wall mounting holes are located in the rear corners of the cabinet (Figure 3). Since there are two enclosure sizes depending on the number of feeders included in the I-Gard Sentinel, the distance between mounting holes are indicated in the table below.

ENCLOSURE DIMENSION	NUMBER OF FEEDER MODULES	DISTANCE BETWEEN MOUNTING HOLES VERTICAL	HORIZONTAL
30” x 30”	Up to 10	26 ¾” (679.5mm)	26 ½” (673 mm)
36” x 30”	Up to 15	26 ¾” (678.5mm)	32 ½” (825.5 mm)

Mounting holes are 3/8” or 9.5 mm wide allowing the use of 5/16” or 9 mm diameter fasteners.

Mount the I-Gard Sentinel securely to the wall in accordance with local codes. Once the I-Gard Sentinel is securely mounted, proceed to the connections. Electrical access to the interior is provided by means of eight knock out openings (See Figure 4) suitable for ½” or 13 mm conduit. Two are located near the bottom of each side and two are located in the bottom near each sidewall. I-Gard Sentinel 3-phase system is available in a variety of voltages that connects to the appropriately labeled terminal blocks (See Figure 5). Connect phase A to terminal block marked A, phase B to terminal block marked B and phase C to terminal block C. The supply cable size should be no smaller than size 14 AWG or size 2.5 in metric system, in agreement with local electrical authority code. Connect the system neutral to the point identified as N on terminal block and the system ground to the point identified as G. Both the Canadian Electrical Code and the National Electrical Code require a minimum size 8 AWG or size 10 in metric system if conduit is used and size 6 AWG or size 16 in metric system if the neutral to ground wire is exposed.

IMPORTANT NOTE: System neutral (N) must be connected to a single point only. All conductors must be insulated to the full system voltage.

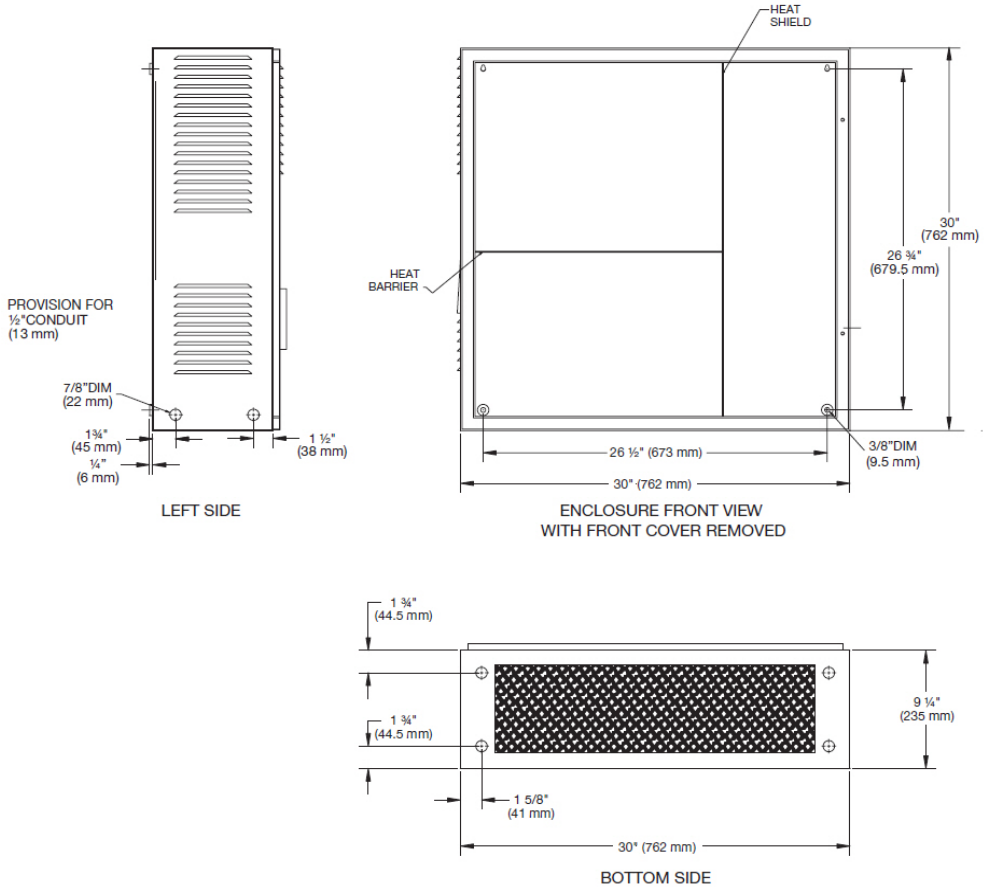

Figure 4: Knock-Out Locations

4. DSP CONNECTING INSTRUCTIONS

All the wiring is between sensors and modules is 14 AWG or 2.5 size in metric system switchboard wire, which need not be shielded. 4-wire shielded cable should be used for the serial communications. A typical wiring schematic is shown in Figure 5.

Sensor wiring is not generally limited by length and may be up to a kilometer without degradation of performance, since the sensor is a current source. Sensor wiring should be run in separate conduit from Power wiring. The recommended sensor wiring connections are shown in Figure 5. Two wires should be run from each sensor X1 and X2 as indicated to prevent cross coupling between Modules. If existing wiring does not allow this connection because of common connection at X2 as has been common in some installations, then the G terminals of the DSP-DFM modules should be connected as shown in Figure 6.

The wires from the zero sequence current sensors to the feeder modules should be twisted.

The RS-485 cable shield should be grounded at the ground terminal provided on the 5-pin jack as shown in Figure 6, which shows a typical installation with a local computer and LAN.

Communications may be supported as a node in an existing MODBUS network or may be connected through a standard RS-485 to RS-232 converter to a PC with supporting software.

The alarm contacts numbered 5, 6 NO and 5, 9 NC, are available at the DSP-DPS as a Form C type and should be connected to operate a horn or other means to alert an operator to the fact that a fault has occurred on the HRG system. The contacts are rated at 10A, 240V AC Resistive. The contacts are located on the terminal blocks at the bottom of the enclosure.

Always perform a final inspection. All foreign objects must be removed from inside the enclosure. All conductors must be secured in the proper positions before closing the door and energizing the system.

DO NOT ENERGIZE the I-Gard Sentinel unless the door is closed and secured by the two bolts provided.

DANGER
Hazard of Electrical Shock, Burn or Explosion
All installation, servicing and testing referred to in this manual must be performed by qualified personnel. All power should be disconnected prior to removing covers or enclosures and where live conductors may otherwise be exposed.
Failure to observe these precautions may result in death or severe personal injury and damage to equipment. Before placing an intentional ground fault on the power system, check that a fault does not already exist. Any test ground fault equipment must be rated for full system voltage and be fused for protection.

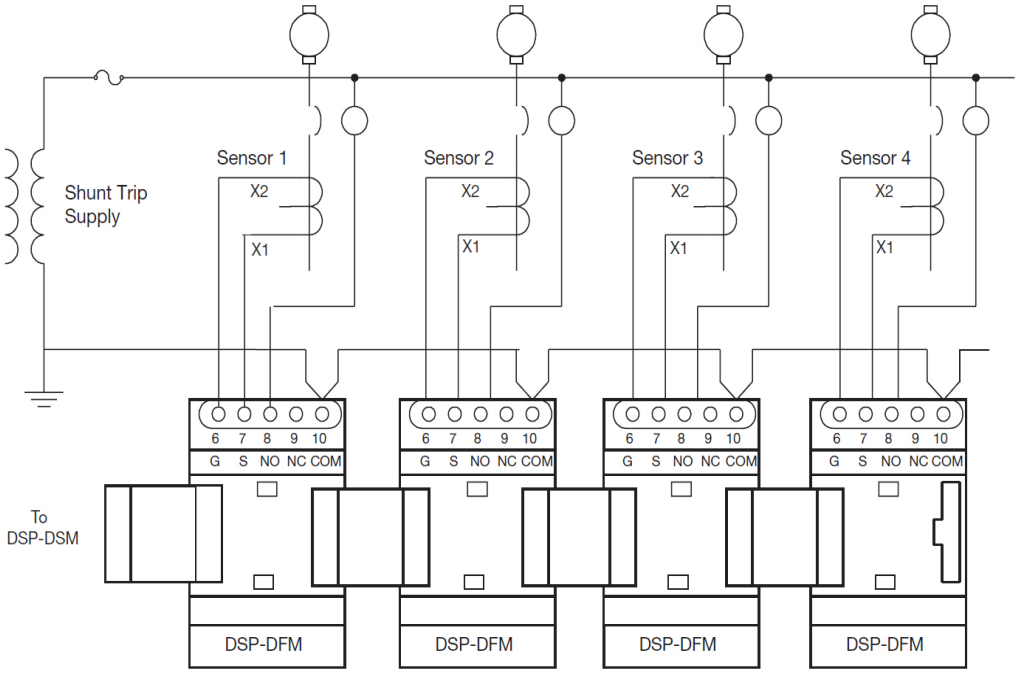

Figure 5: Preferred Feeder Module DSP-DFM Wiring

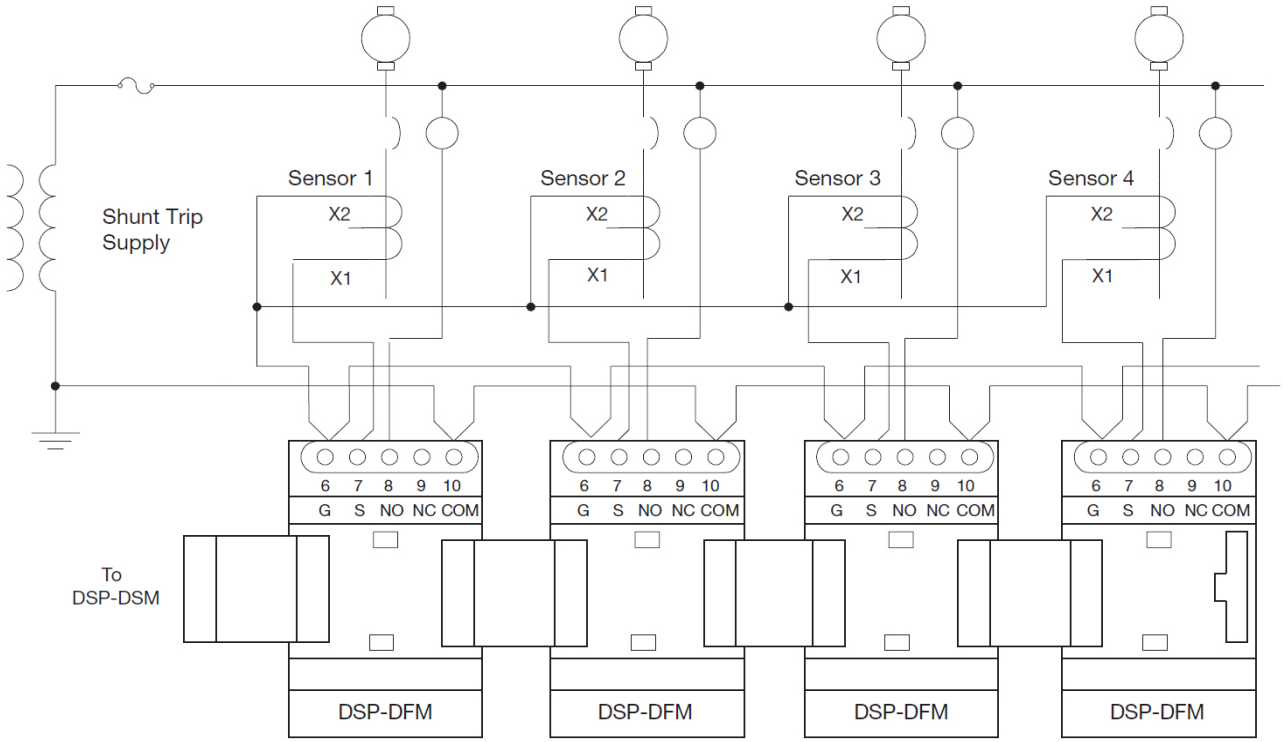

Figure 6: Alternative Sensor Wiring

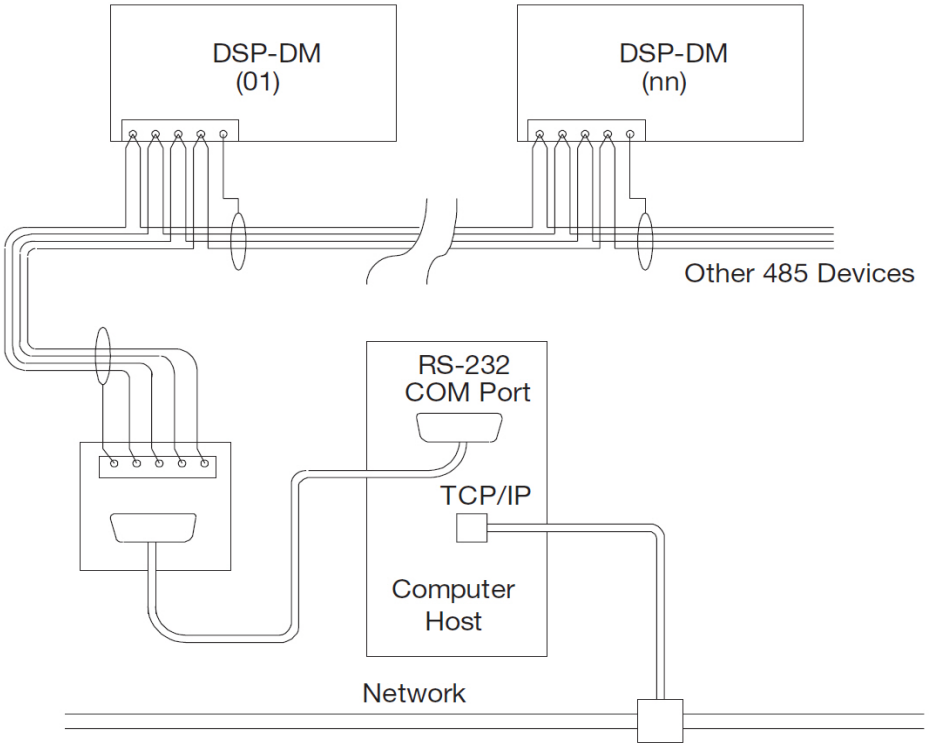

Figure 7: Typical 4-wire Communications Connection

Communications wiring may be 2-wire or 4-wire but must use shielded cable with low capacitance. Wire lengths up to 2000 meters can generally be used without the need for termination resistors.
Figures 6 and 7 show typical RS-485 arrangements with an RS-485/RS-232 converter and a host PC connected to a LAN.

5. OPERATION/ SET-UP

For setup instructions please refer to the instructions set out in the C-409 DSP-OHMNI manual.

6. ADDITIONAL INFORMATION

If you require any information or direction on how to proceed in ensuring unparalleled protection with your equipment please contact I-Gard customer service. We are here to help Monday to Friday 9:00am - 5:00pm EST.

NOTES

GARD

Unparalleled Protection

Phone: 905-673-1553
Toll Free: 1-888-737-4787

Fax: 905-673-8472
sales@i-gard.com

www.i-gard.com